BOARD OF EDUCATION SCIENCE MUSEUM

HANDBOOK OF THE COLLECTION ILLUSTRATING

TYPEWRITERS

A BRIEF OUTLINE OF THE HISTORY AND DEVELOPMENT OF THE CORRESPONDENCE TYPEWRITER WITH REFERENCE TO THE NATIONAL COLLECTION, AND DESCRIPTIONS OF THE EXHIBITS

By G. TILGHMAN RICHARDS
M.I.Mech.E., F.R.Ae.S., M.I.Ae.E.

Crown Copyright Reserved

LONDON
PUBLISHED BY HIS MAJESTY'S STATIONERY OFFICE
To be purchased directly from H.M. STATIONERY OFFICE at the following addresses:
Adastral House, Kingsway, London, W.C.2; 120 George Street, Edinburgh 2;
26 York Street, Manchester 1; 1 St. Andrew's Crescent, Cardiff;
80 Chichester Street, Belfast;
or through any bookseller

1938

Price 1*s*. 3*d*. net

The Government does not accept responsibility for statements from non-Official sources made in the advertisement pages of this publication, and the inclusion of any particular advertisement is no guarantee that the goods advertised therein have received official approval.

PREFACE

THE formation of a Museum of Science was first proposed by the Prince Consort after the Great Exhibition in 1851, and in 1857 collections illustrating foods, animal products, examples of structures and building materials, and educational apparatus were brought together and placed on exhibition in South Kensington. Subsequently many additions were made, including: in 1884 the collection of machinery formed by the Commissioners of Patents; in 900 the Maudslay Collection of machine tools and marine engine odels; and in 1903 the Bennet Woodcroft Collection of engine models nd portraits.

Until 1899 the Art Collections and the Science and Engineering Collections together formed the South Kensington Museum, but in hat year the name was changed to the Victoria and Albert Museum, hich included both Collections until 1909, when it was restricted to Art Collections; those relating to Science and Technical Industry ve since then formed the Science Museum.

The aim of the Science Museum, with its Collections and Science brary, is to aid in the study of scientific and technical development, to illustrate the applications of physical science to technical istry. This is effected by the informative display of objects, rams, and photographs—so arranged as to illustrate in each Section development which has taken place from past to modern practice.

Many of the exhibits are so arranged that they can be operated by itors or demonstrated to them. Others have been sectioned so that e internal structure can be clearly seen. A detailed descriptive label s placed by each object.

The collection of typewriters includes original examples of most of the important developments which have taken place between 1829 and the present day. It shows the evolution of the typewriter from a slow and primitive writing appliance to the modern highly efficient manual and electrically operated machines which play such an important part in business, literary, and private use.

CONTENTS

	PAGE
INTRODUCTION AND GROUPING SYSTEM OF THE EXHIBITS	5
HISTORICAL NOTES AND DESCRIPTIONS OF THE EXHIBITS IN CHRONOLOGICAL ORDER	21
LIST OF DONORS AND CONTRIBUTORS	51
INDEX	55

LIST OF ILLUSTRATIONS

PLATE		FACING PAGE
I.	Burt "Typographer," 1829 Pratt "Pterotype" Machine, 1866	28
II.	Portrait of Christopher Latham Sholes Final Sholes and Glidden Model, 1873	29
III.	Hansen "Writing Ball," 1870–75 Sholes, Glidden, and Soulé's Experimental Typewriter, 1868	30
IV.	Sholes and Glidden Typewriter as built by E. Remington & Sons, 1874–76 Remington Typewriter, No. 2, with change of case, 1878	31
V.	Hammond "Ideal" Typewriter, 1884 Crandall Typewriter, No. 3, 1893	32
VI.	"Velograph" Circular Index Typewriter, 1887 Bar-Lock Typewriter, No. 7, 1889	33
VII.	Williams Typewriter, 1892–94 Oliver Typewriter, No. 1, 1894	42
VIII.	Underwood Typewriter, No. 1, 1897 Remington Typewriter, No. 10, 1907	43
IX.	"Ideal" Typewriter, 1900 Underwood Noiseless Portable Typewriter, 1931	50
X.	Remington Noiseless Standard Typewriter, 1934 "International" Electric Typewriter, 1936	51

23 MAY

INTRODUCTION

TO-DAY the typewriter plays such an important part in both the business activities and the private correspondence of the whole world that there is no need to enlarge on its influence, which is apparent to all engaged in correspondence, book-keeping, invoicing, billing and listing, transcription of shorthand and of legal documents, newspaper reporting, preparation of matter for lithographic reproduction, and many other fields of activity. On the other hand, we are to-day so familiar with the part taken by women in commercial life that one may overlook the very important part played by the typewriter in their so-called "emancipation." It opened up a new field for female employment, and during the last fifty years has provided an occupation and living for literally millions of women, the actual figure being difficult to compute, but considered to be now well over the half-million in Great Britain alone. The great new field of employment has occasioned the union of the twin accomplishments of shorthand writing and efficient high-speed typewriter operation, the names of Isaac Pitman and of C. L. Sholes standing out as those of the two great pioneers in this connection. To-day the acquisition of skill in both arts is almost an essential qualification for high-class secretarial employment.

This Handbook of the National Collection of Typewriters illustrates in considerable detail how the evolution of the modern machine has come about from the early trials and struggles of many inventors. In the early days the urge to provide writing machines for the use of blind persons was one of the main factors in experimental development. This desire seems to have been particularly active in the late eighteenth and early nineteenth centuries, when some twenty-three different methods of making embossed printing were in existence, of which the best known were those devised by Lucas, Frere, Moon, and Braille. The latter published his system in 1829 and developed it further in 1834. It was officially recognised in Paris in 1854.

Somewhat later than the foregoing, the advances made in the electric telegraph brought about the design of machines for the rapid transcription of telegrams. The development of the typewriter proper is in effect the most modern stage in man's endeavour to break away from the limitations of the written word, though the urge to speed up the methods of recording thought and speech is no modern development. It goes back to the earliest civilisations, to the impressed clay plaques of the Akkadians and Sumerians, to seals, roller impressors, etc., and to shorthand writing which was certainly used by the ancient Greeks from at least the fourth century B.C.; whilst later we have the introduction of the "Notæ Tiroianæ" consisting of some 5,000 word-signs, invented by Marcus Tullius Tiro, a learned slave freed by

Cicero and made his secretary. Tiro's "note" system was widely used in ancient Rome. Following the Middle Ages, during which a practice had grown up of using contracted words and abbreviations in manuscript writing and in printing, there occurred a recrudescence of inventiveness in the art of shorthand, shown by such systems as those of John Willis, whose "Art of Stenographie" ran to fourteen editions between 1602 and 1647, and the systems of Tiffin, 1750; Lyle, 1762; Holdsworth and Aldridge, 1766; Roe, 1802; Bailey, 1819; Towndrow, 1831; and De Stains, 1839, which were all phonetic systems, with the important publication of Pitman's "Stenographic Sound-Hand" in 1837, and in December, 1841, the first issue of what later became *Pitman's Journal*, all being stages in the reduction of the labour of handwriting.

It was not until the adoption of printing in the middle fifteenth century, after its 800-year development in the Far East, that we in Europe were able to free ourselves from some of the slavery of the pen; until then every document, every manuscript had to be written out by hand.

Typewriting is in fact an intermediate step between handwriting and typesetting and printing. Handwriting has almost disappeared in many business activities, though still retained in such occupations as engrossing legal documents and the like uses.

The true function of all classes of machinery is to let the machine take upon itself the bulk of human drudgery in order that mankind may have leisure and freedom in which to develop a beauty and happiness in life never experienced by the toiling masses of earlier civilisations. When we have learnt to use the gift of the machine in our social development, and to look upon it less as an implement of competition than as an instrument of plenteous production, coupled with a more rational distribution of its products amongst the nations, we shall be in a fair way to the realisation of such an ideal.

It is interesting to note that the practical typewriting machine only celebrated its sixty-fifth birthday on March 1st, 1938, the date in 1873 when Messrs. E. Remington & Sons signed a contract to manufacture the "Sholes and Glidden" typewriter, the history of which is fully dealt with later. Many inventors during the preceding half-century had produced experimental machines quite as meritorious as the crude ideas which formed the early efforts of the group associated with Sholes, but the circumstance which rendered their efforts abortive was that the time was not ripe for the invention. We have seen, however, that many of the early devices were primarily intended to permit those suffering from blindness to read and write. Here speed is of little account, and it was not until the machine became capable of far surpassing the pen in speed that the possibilities of the device began to be appreciated. Speed was the chief reason for exchanging the penny pen for a machine usually costing over £20, legibility being a secondary though important consideration, and, until the business world realised that the use of shorthand dictation coupled with its transcription by

the typewriter freed the busy man from pen drudgery, the typewriting machine remained but an interesting novelty. Even by 1873, when Sholes had completed his experimental work, the time was not quite ripe, and the Remington Company found it a hard task to interest the public; and, when the typewriter made its first serious appearance in public, at the Centennial Exposition in 1876, it attracted but little attention, whereas the Graham Bell telephone also exhibited created world-wide interest. In those early years one group after another of salesmen failed to induce a public interest. It is illuminating to find that in 1881 the Remington Company disposed of only 1,200 machines during the year. The turning point in sales came in 1882, when the well-known firm of Wyckoff, Seamans, & Benedict was formed to take over the selling agency for the whole world. This firm purchased the Remington interests in 1886. The manufacturing side was later constituted as the Remington Typewriter Company, in 1903, and in 1927 this was included in the organisation of Remington Rand Inc.

Some sales of the Remington had been effected in England as early as 1874; direct representation was arranged in Germany in 1883; in Paris, 1884; Russia, 1885; Wyckoff, Seamans, & Benedict opened their London office in 1886; in Belgium, 1888; in Italy, 1889; Holland, 1890; Denmark, 1893; and Greece, 1896. This enumeration of the expanding activities in the sale of the "Remington" is included as representative of the rapidly developing market for the invention. The first Remington catalogue was a shy and halting document, the makers little dreaming at that date of the place that the typewriter was to carve for itself in later years; but, all the same, the description contains one great prophecy in naming the machine "A Machine to Supersede the Pen."

Many of the components of the typewriter have at various times been the subjects of fierce controversy, as, for instance, ribbon inking against direct inking of the type. Although ribbon inking is almost universal to-day, it is admitted that direct inking gives clearer impression and more beautiful work, but the direct inking apparatus requires constant attention to keep it working satisfactorily. Another argument was concerned with the use of the single-keyboard with shift key for change of case, against the use of the full- and double-keyboard designs. The latter finally became obsolete due to the spread of the "touch" system of typing compared with the older method of typing at a time only so much as the eye can retain. In the touch system the operator does not look at the keys at all, just as a trained player does not regard the keys of the pianoforte. The argument as to the merits of the rival systems was finally settled when a contest was staged in July, 1888, at Cincinnati, between McGurrin, who had taught himself the touch method in 1878, and Traub, the leading exponent of the opposing school. McGurrin won easily and from that date the touch system steadily superseded the older way. Another point, which has never been finally disposed of, is the value of differential spacing of the characters, which has always had zealous advocates amongst British inventors, amongst whose productions were the Daw and Tait (48),

Waverley (55), and Maskelyne (58 and 60). American inventors have produced at least two, the Columbia (11) and the Crandall (17), but in the United States the idea has been abandoned as an unnecessary and difficult adjunct. Differential spacing is provided in order that type-written matter shall be "justified" in the same way as printing, whereas the ordinary typewriter allots the same spacing to "i," a "full-stop," and to wide letters such as "W" and "M"—a practice which horrifies the printer. One disadvantage of differential spacing is that if a mistake is made, for instance the striking of "nn" instead of "mm," erasure leaves insufficient space for the insertion of the two m's. Another argument as yet unsettled is that of the relative merits of shifting the platen versus shifting the type-basket, whilst still another argument is concerned with the convenience of the standard four-bank keyboard with single shift, as against the compactness and cheaper construction obtained by the use of a three-bank keyboard with double shift, this being frequently employed in portable machines, though some of the high-class portables incorporate the four-bank and single shift system, the latter being practically standard in "office" non-portable machines.

Arrangement of the Collection

In the Collection the method adopted of grouping the exhibits is arbitrary. They might be grouped under type-bar or alternative systems embracing the sector, wheel, sleeve, and index designs, or they might be grouped according to the kind of keyboard employed, but it is considered that the most illuminating and informative method is to group the machines in accordance with the manner in which the printed impression is accomplished, and the Collection is therefore divided up into such groups, and arranged in chronological order within the group, as follows :—

Group 1. Swinging-Sector Designs

This group comprises designs in which the type characters are mounted on a sector of a circle, impression being made by rotation and registration of the sector followed by contact with the paper by pressing the sector against the platen ; by springing the character by a plunger ; or by hammer impression. The system of design merges into the Type-Wheel class without a defined boundary.

EXHIBITS

No.	*Date.*	*Title.*	*Inv. No.*	*Desc., see p.*
1.	1829.	Burt's "Typographer." Plate I.	1926–332.	22
2.	1851.	Wheatstone's Telegram Printer.	1884–197.	25
3.	1856.	Wheatstone's second ditto.	1884–198.	26
4.	1855–60.	Wheatstone's third ditto.	1884–70.	26
5.	1884.	Hammond "Ideal." Plate V.	1931–281.	33
5*a*.	1896.	"Globe."	1937–81.	42
6.	1899.	"Keystone."	1927–916.	44
7.	1923.	Hammond Folding Portable.	1923–1489.	49

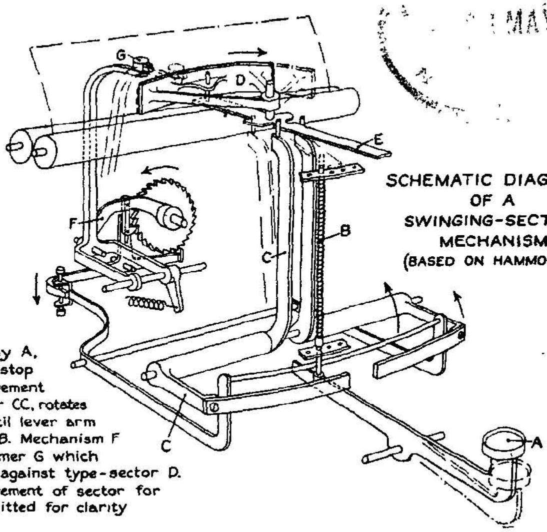

SCHEMATIC DIAGRAM OF A SWINGING-SECTOR MECHANISM (BASED ON HAMMOND)

Depression of key A, raises a selector stop pin B, and, by movement of bell crank lever CC, rotates type-sector D, until lever arm E meets stop pin B. Mechanism F then releases hammer G which strikes the paper against type-sector D. Vertical shift movement of sector for change of case omitted for clarity

Group 1a Type-Wheel Designs

This and the following Group (1b) show developments from the Swinging-Sector designs. Generally the type-wheel carries one or three rows of characters around the rim, the latter to permit change of case by double shift for lower case, capitals, and figures and signs respectively. In both type-wheel and sleeve designs the device is rotated and/or moved longitudinally into register and the impression made by striking the wheel or sleeve on to the platen, or by separate hammer impression.

EXHIBITS

No.	*Date.*	*Title.*	*Inv. No.*	*Desc., see p.*
8.	1857.	Peter Hood's Typewriter.	1930–273.	26
9.	1860–70.	John Cox's Typewriter.	1915–354.	28
10.	1866.	John Pratt's " Pterotype." Plate I.	1893–185.	28
11	1886.	" Columbia " (two exhibited).	1894–178 & 1926–788.	35
12.	1893.	Blickensderfer.	1937–571.	39
13.	1894.	" Victor."	1936–424.	39
14.	1898.	Edelmann.	1929–896.	43
15.	1907.	" Junior."	1935–82.	45
16.	1910.	Bennett.	1935–81.	46

The first practical machine in this class was John Pratt's " Pterotype " (10) of 1866. Pratt, however eventually found himself in interference with two other inventors, J. B. Hammond and L. S. Crandall, yielding precedence to Hammond in relation to the Type-Wheel, whilst, by arrangement, Crandall proceeded with the development of the Type-Sleeve system. This agreement was of an arbitrary nature, and Hammond did not in fact develop the Type-Wheel system, but utilised a Swinging-Sector mechanism, his machines appearing in Group 1.

The knob A rotates type-wheel B until desired character is in register, shown by geared pointer on index plate C. Depression of knob A strikes type-wheel B down on to platen. Differential spacing secured by cams operating 1, 2 or 3 teeth of spacing rack, not shown. Spring D raises unit from platen.

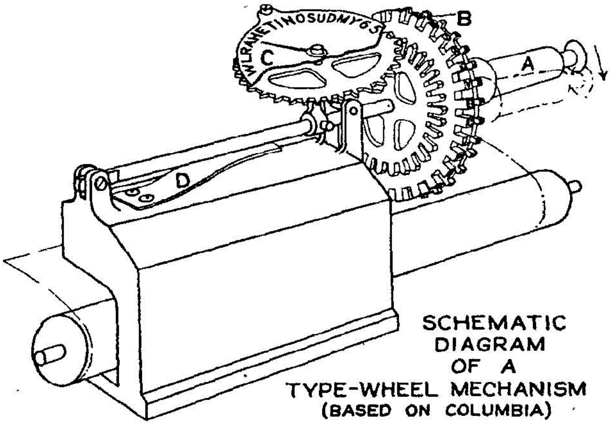

SCHEMATIC
DIAGRAM
OF A
TYPE-WHEEL MECHANISM
(BASED ON COLUMBIA)

Each half of the keys operates one of the gear quadrants B and C. Depression of key A firstly engages quadrant bar D, quadrant C, rolls pinion E and type-wheel F downwards until key A secondly engages register bar G and detent H engages the appropriate tooth of ratchet cam J, when the whole assembly moves downward to platen. The mechanism for change of case by longitudinal double shift of type-wheel is omitted for clarity.

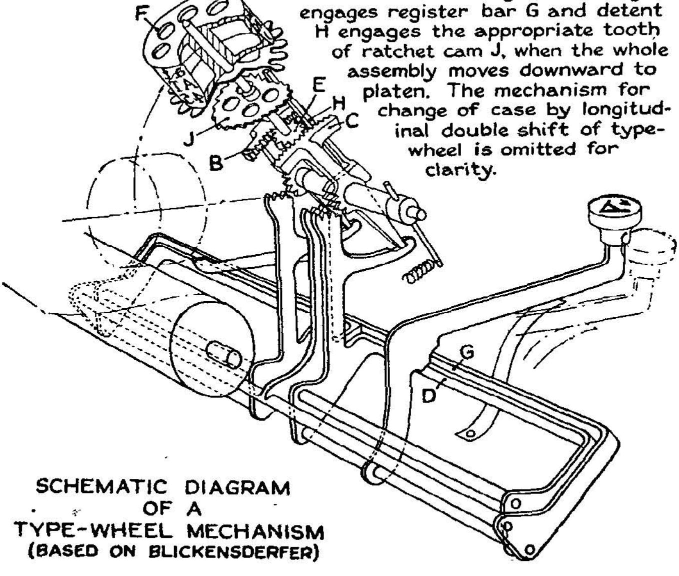

SCHEMATIC DIAGRAM
OF A
TYPE-WHEEL MECHANISM
(BASED ON BLICKENSDERFER)

Group 1b. Type-Sleeve Designs

The divergence of this group from the preceding one is explained in the note above, L. S. Crandall taking up the development of the Type-Sleeve system. The Type-Sleeve is differentiated from the Type-Wheel by having a type-carrying cylinder of considerable axial length and of relatively small diameter with some half-dozen or more rows of characters spaced round the cylindrical surface. Impression is made as described in Group 1a.

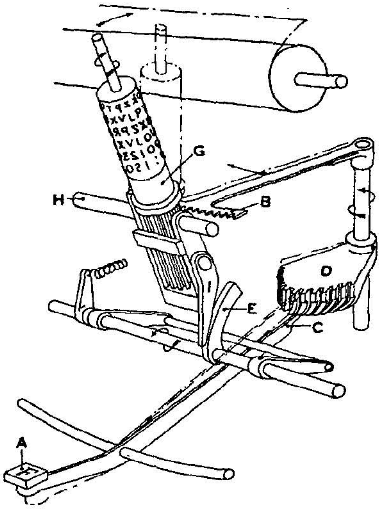

Depression of key A, by engagement of C, rotates the selector cam D, causing gear sector B to revolve the type-sleeve G into register, and secondly, cam E engages cam I rotating the sleeve G about axis H and so to the platen.
The mechanisms for ring selection by lifting gear and for change of case by double-shift, all by longitudinal movement of the sleeve, are omitted for clarity.

SCHEMATIC DIAGRAM
OF A
TYPE-SLEEVE MECHANISM
(BASED ON CRANDALL)

EXHIBITS

No.	*Date.*	*Title.*	*Inv. No.*	*Desc., see p.*
17.	1893.	Crandall No. 3, "New Model." Plate V	1934–644.	38
18.	1889.	Munson.	1930–109.	36
19.	1889–93.	Gardner.	1911–12.	39
20.	1902.	Moya.	1928–1349.	45

Group 2. Radial-Strike Designs

Grouped under two sub-sections: Radial-Striking-Plunger and Radial-Striking-Bar classes. In early machines a great difficulty was encountered. Where the strike is made from a position approximating to a right angle to the platen axis normal impression is easily attained, but, where the strike is made from an angle materially different from the above condition, the type strikes on the platen obliquely, tending to slide laterally along the platen face, so giving blurred and distorted impression. In modern practice this difficulty has been overcome, and the Radial-Striking-Bar has been resuscitated and used in the design of several modern machines of the "noiseless" class, examples of which are shown.

The radial key plungers A.A. all strike to a common point B. this being the common conical apex on the surface of the platen.

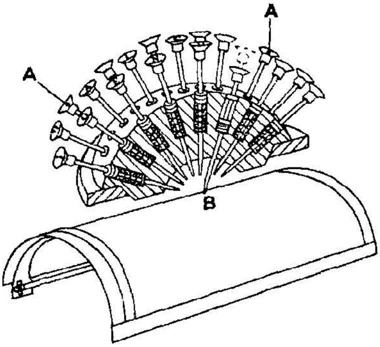

SCHEMATIC DIAGRAM
OF A
RADIAL-STRIKING-PLUNGER
MECHANISM
(BASED ON HANSEN)

In modern designs each type-bar B is operated by two keys A., giving two characters. On depression the link C engages cam D and bell-crank E, the latter moving type-bar B close to platen, the over-throw of "momentum accumulator" weight F making pressure contact. The linkage G, (shown for one key only) determines which character shall come to platen. The mechanism for change of case by vertical shift of platen is omitted for clarity.

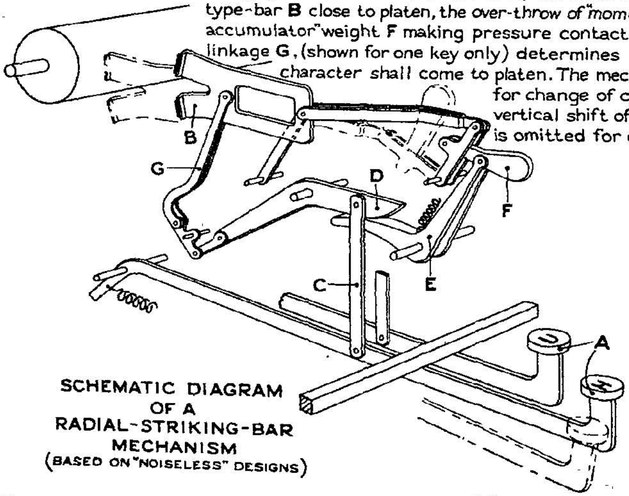

SCHEMATIC DIAGRAM
OF A
RADIAL-STRIKING-BAR
MECHANISM
(BASED ON "NOISELESS" DESIGNS)

23 MAY

No.	Date.	Title.	Inv. No.	Desc., see p.
		Radial-Striking-Plunger.		
21.	1865.	Pratt's Original Typewriter.	1903–6.	27
22.	1870–75.	Hansen's " Writing Ball." Plate III.	1906–9.	29
23.	1896–98.	Lambert (rolling disc design).	1907–8.	42
		Radial-Striking-Bar.		
24.	1895.	Ford.	1915–291.	41
25.	1896.	Granville " Automatic."	1928–1346.	42
25*a*.	1910.	Original " Noiseless " (cam action).	1937–318.	46
26.	1923.	" Empire."	1923–1488.	49
27.	1934.	Remington " Noiseless " Standard. Plate X.	1937–79.	52
28.	1934.	Underwood " Noiseless " Standard.	1934–660.	52
28*a*.	1934.	Underwood Operable Type-Bar Action.	1936–26.	52

Group 3. *Index System Designs*

The Index class covers a multiplicity of methods, using various forms of index movement—linear, circular, square, etc. In general a pointer is moved to the desired character, or a plate index rotated to bring the character to a determined point, depression of the pointer, or of the circular plate, or sometimes of a separate key, making the impression. They are all too slow in operation to compete with type-bar machines.

The index-plate A is rotated to bring the character under key B, which when depressed forces a type-plunger C down to printing point, and, in rising, causes pawl D to engage ratchet wheel E for spacing by travel of the mechanism along spiral F.

SCHEMATIC DIAGRAM
OF A
CIRCULAR-INDEX MECHANISM
(BASED ON HUGHES)

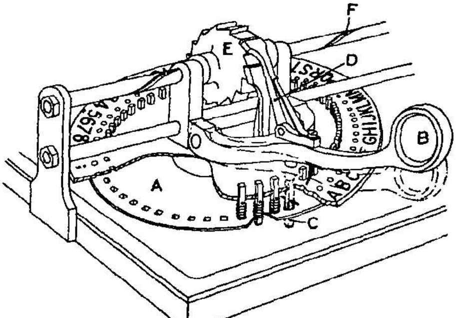

Sideways movement of pointer A over the square index B rotates type-sleeve C by rack and pinion D. To and from movement of A causes bracket E and sleeve C to move similarly for letter-circle selection. Key F strikes sleeve C on to platen. The guide comb G gives longitudinal register of sleeve. A guide-wheel (similar to Blick, Group IA., not shown here for clarity) ensures rotational register.

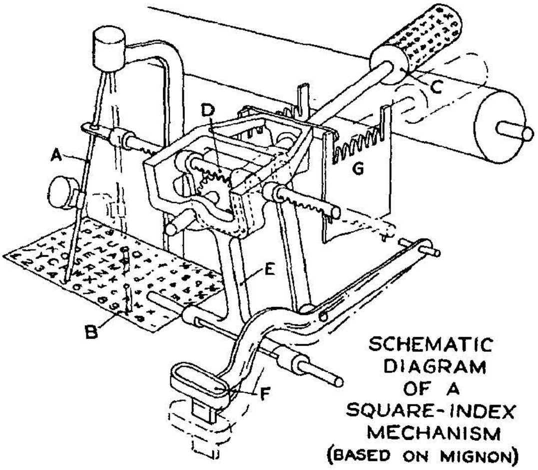

SCHEMATIC DIAGRAM OF A SQUARE-INDEX MECHANISM (BASED ON MIGNON)

EXHIBITS

No.	*Date.*	*Title.*	*Inv. No.*	*Desc., see p.*
29.	1850.	Hughes Typewriter for the Blind.	1862–20.	24
30.	*c.* 1860.	Circular Index (maker unknown).	1934–581.	27
31.	1881.	Hall Typewriter, Linear Index.	1899–10.	33
32.	1884.	"Hammonia" Linear Index.	1904–10.	34
33.	1887.	"Velograph" Circular Index. Plate VI.	1930–244.	36
34.	1904.	"Mignon" Square Index and Type-Sleeve.	1924–30.	45
35.	1914.	"Virotyp" Circular Index.	1928–1351.	48

Group 4. *Type-Bar Using Designs.* (In four sub-divisions)

Sub-Division 4a. Up-Strike Designs

This group shows the beginnings of development leading to the successful Semi- and Front-Strike machines (see 4c and 4d). In the Up-Strike system the type-bars are hung downwards in a circular type-basket and strike up to a common printing point on the underside of the platen roller, the writing remaining invisible until the platen is raised. The Group contains the early models developed by the Remington Company from the historic Sholes and Glidden final model of 1873, appearing as the Remington No. 1 in 1876, and No. 2, with change of case, in 1878.

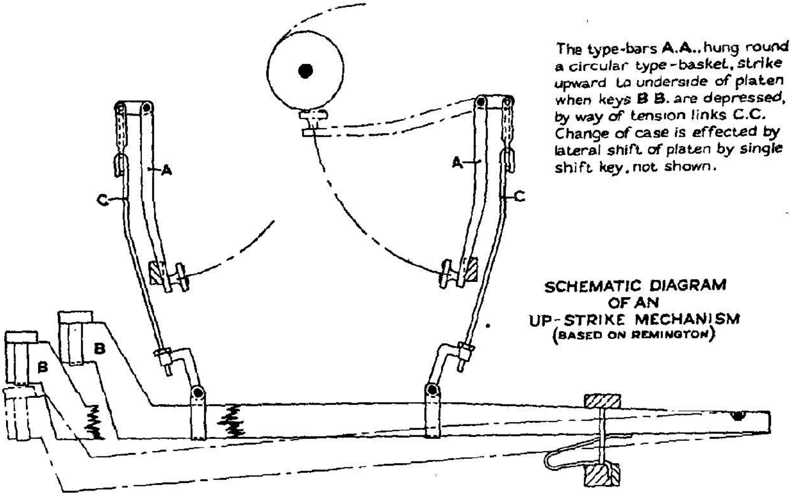

EXHIBITS

No.	*Date.*	*Title.*	*Inv. No.*	*Desc., see p.*
36.	1874–76.	"Sholes and Glidden" as built by Remington. Plate IV.	1881–55.	30
37.	1876.	Remington No. 1.	1930–108.	32
38.	1878.	Remington No. 2. Plate IV.	1880–62.	32
39.	1883.	Yöst "Caligraph."	1930–105.	34
40.	1888.	Remington No. 5.	1931–276.	36
41.	1889.	Yöst No. 1.	1928–1352.	37
42.	1891.	Densmore.	1928–591.	38
43.	1895.	Smith Premier No. 4.	1908–5.	41
44.	1896.	Remington No. 7.	1935–23.	42
45.	1900.	"New Century Caligraph."	1934–468.	44
46.	1902.	Armstrong No. 8.	1928–1347.	45
47.	1905.	Yöst No. 10.	1928–592.	45

Sub-Division 4b. Down-Strike Designs

This sub-division is arranged in three groups, in accordance with the way in which the down-strike is made. In all cases the type-bars strike downwards to a common printing centre on the top centre line of the platen.

Down-Strike-From-Front Designs

When, as here, the type-bars at rest stand between the operator and the printed characters, visibility is reduced and generally requires that the operator shall look over the top of the type-bar carrier. In a few cases the type-bars are arranged as a complete circle, these machines being included here, due both to the insignificant number of such designs, and also to the fact that the interference with visibility is of much the same order.

Depression of key A actuates bell-crank lever B against pull of spring C. Compression link D swings type-bar E down to upper side of platen. Change of case by lateral-shift of platen is by double shift key mechanism, not shown.

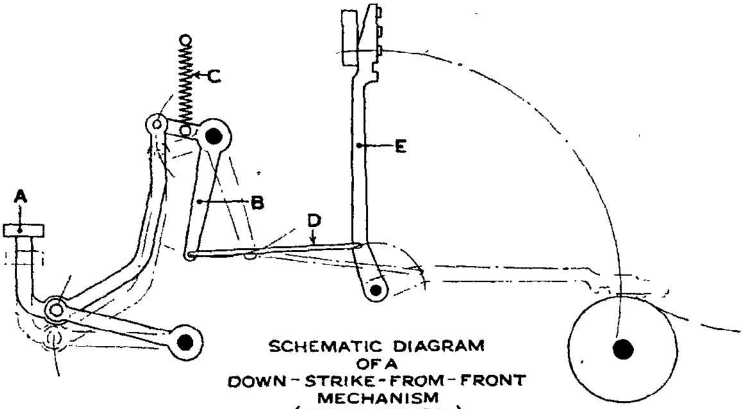

SCHEMATIC DIAGRAM OF A DOWN-STRIKE-FROM-FRONT MECHANISM (BASED ON IMPERIAL)

EXHIBITS

No	*Date.*	*Title.*	*Inv. No.*	*Desc., see p.*
48.	1884.	Daw and Tait (full circle design).	1925–430.	34
49.	1889	Bar-Lock No. 7. Plate VI.	1915–32.	36
50.	1890.	" English."	1891–163.	37
51.	*c.* 1912.	" Correspondent."	1930–106.	47
52.	1915.	Imperial Model B.	1935–190.	48
53.	1919.	Imperial Model D.	1935–191.	48

Down-Strike-From-Rear or -Side

In these designs the type-bars are arranged to strike down on to the platen from a point at the rear or at the side, so leaving the printed characters visible to the operator. The From-Rear class, and also at least one example of the following " Grasshopper " class, suffer from the disadvantage that the motion of the type-bars prohibits the upward advance of the paper, requiring that the finished portion shall be fed into a container, making the earlier printing invisible.

EXHIBITS

No.	*Date.*	*Title.*	*Inv. No.*	*Desc., see p.*
54.	1886.	Fitch.	1892–102.	35
55.	1895.	" Waverley."	1895–81.	40
56.	1894.	Oliver No. 1. Plate VII.	1936–31.	40
57.	1895.	North.	1895–80.	40

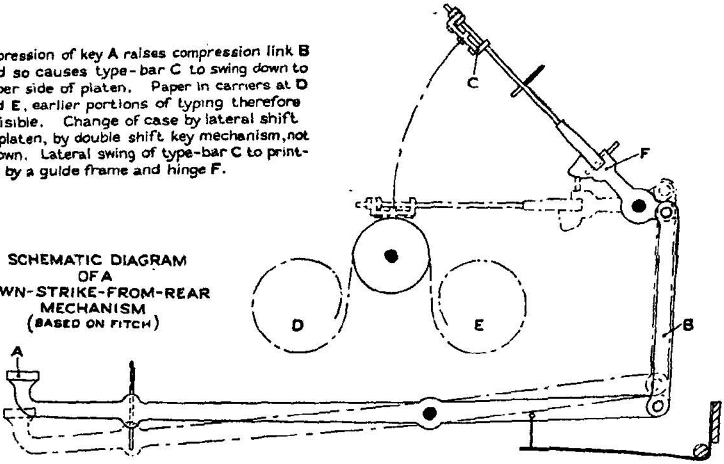

Depression of key A raises compression link B and so causes type-bar C to swing down to upper side of platen. Paper in carriers at D and E, earlier portions of typing therefore invisible. Change of case by lateral shift of platen, by double shift key mechanism, not shown. Lateral swing of type-bar C to printing by a guide frame and hinge F.

SCHEMATIC DIAGRAM OF A DOWN-STRIKE-FROM-REAR MECHANISM (BASED ON FITCH)

"*Grasshopper*" *Movements*

In this, the third sub-group of 4b, the characters are mounted on type-bars so set that they remain generally substantially horizontal during movement, a common form of movement being a parallel motion to carry the bar over, from its position of rest on an inking pad, to strike down on to the platen at the top centre line.

The type-bars AA are grouped before and behind the platen, each group operated by half the keys BB. Depression of key operates bell crank lever D by link C, and by action of link E throws over type-bar A from ink pad F to upper side of platen. Spring G is loaded by link H which has a toggle action past dead centre. Tension springs KK return mechanism to free position. Change of case by lateral shift of platen, by double shift.

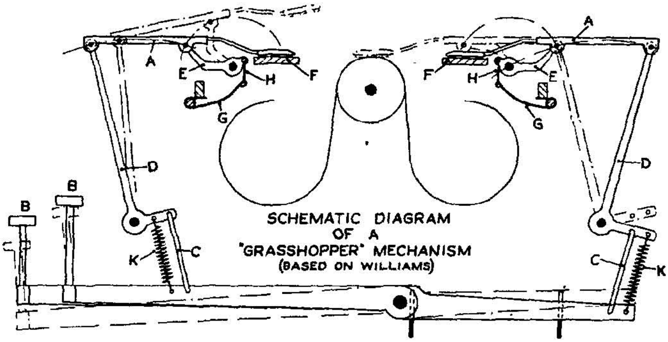

SCHEMATIC DIAGRAM OF A "GRASSHOPPER" MECHANISM (BASED ON WILLIAMS)

EXHIBITS

No.	*Date.*	*Title.*	*Inv. No.*	*Desc., see p.*
58.	1889.	Maskelyne "Differential."	1913–683.	37
59.	1892–94.	Williams. Plate VII.	1915–290.	38
60.	1897.	Maskelyne "Victoria."	1921–69.	43

Sub-Division 4c. Semi-Front-Strike Designs

The Semi-Front-Strike design might be described as intermediate between the Down-Strike-From-Front and the true Front-Strike machines of Group 4d. The type-basket is inclined backward from the platen at about 45 degrees, giving full visibility by the backward slope of the type-bars when at rest, and by making the type strike to a common printing centre at a point about half-way between the vertical and horizontal centre lines of the platen roller, *i.e.* the point at which the eye looks naturally when examining the line.

The parent machine of this class was the Canadian-made Horton of 1883. The design has recently again come to the fore, particularly for the portable machines, since the slope of the type-bars materially reduces the height from baseboard to platen, making for compactness.

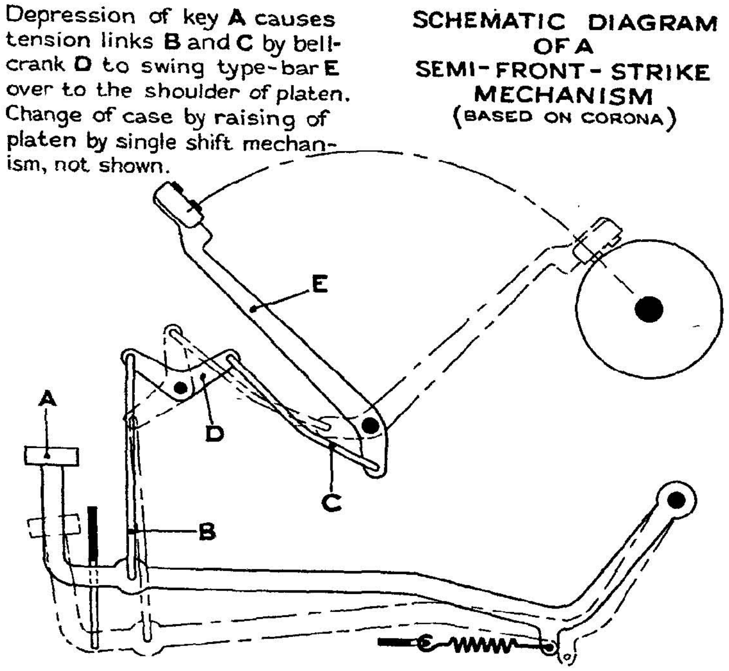

EXHIBITS

No.	*Date.*	*Title.*	*Inv. No.*	*Desc., see p.*
61.	1900.	"Ideal." Plate IX.	1930–107.	44
62.	1911–15.	Bar-Lock No. 15.	1930–104.	47
63.	1913.	Salter "Standard."	1928–1348.	47
64.	1924.	"Corona Four."	1924–718.	50
65.	1931.	Remington "Noiseless" Portable.	1937–77.	50
66.	1931.	Underwood "Noiseless" Portable. Plate IX.	1934–661.	50

No.	*Date.*	*Title.*	*Inv. No.*	*Desc., see p.*
67.	1932.	Imperial Portable " Good Companion."	1934–647.	51
68.	1933.	Remington Rand Portable, Model I.	1937–78.	51
69.	1935.	" International " Electric. Plate X.	1935–635.	53

In all the classes of machine utilising the semi-circular type-basket the width available for bar bearings is restricted, circumvented in some designs by staggering the bearings or by making them lie tangentially. In modern designs, the use of a guide comb and a type guide, associated with pressed semi-flexible type-bars, appears to be becoming the standard practice. (See sketches below.)

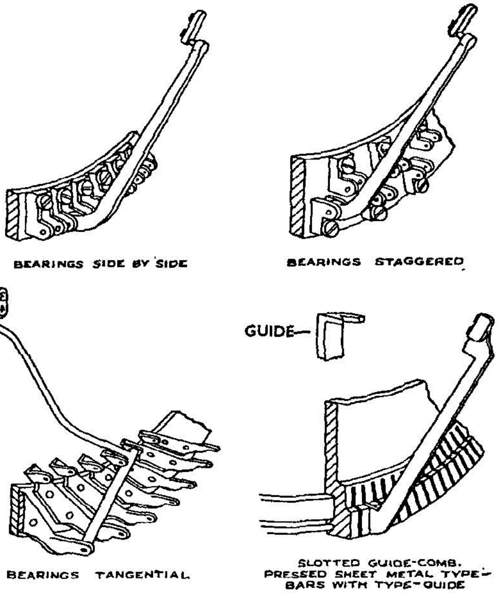

ARRANGEMENTS OF TYPE-BAR BEARINGS IN THE TYPE BASKET

Sub-Division 4d. Front-Strike Designs

The Front-Strike class comprises the majority of the modern " office " or non-portable designs, the type-bars being arranged in a semi-circular type-basket so that at rest they lie in the horizontal plane, striking to a common printing centre at or about the horizontal centre line of the platen roller, so leaving the characters in full view. The earliest of the true Front-Strike designs appear to be those of the almost simultaneous patents of Prouty and Hynes, and of Grundy in 1887, neither of these was, however, actually manufactured.

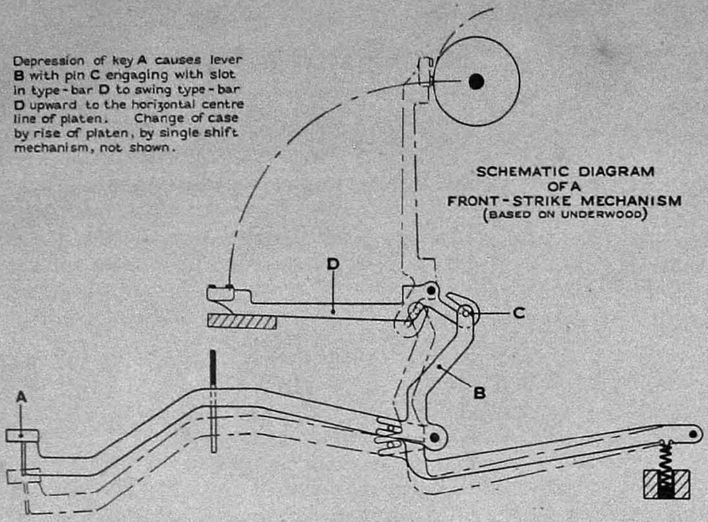

EXHIBITS

No.	*Date.*	*Title.*	*Inv. No.*	*Desc., see p.*
70.	1897.	Underwood No. 1. Plate VIII.	1936–11.	43
71.	1898.	" Pittsburg."	1915–292.	44
72.	1907.	Remington No. 10. Plate VIII.	1935–24.	45
73.	1908.	Smith Premier No. 10.	1928–311.	46
74.	1916.	" National " Portable.	1934–467.	48
75.	1921.	" Noiseless " Portable.	1928–1350.	48
76.	1923.	" Orga."	1923–1494.	49
77.	1923.	Yöst No. 20.	1923–1487.	49
78.		(Void. No. reserved)		
79.	*c.* 1929.	Bar-Lock Portable.	1931–538.	50
80.	1925–28.	Bar-Lock No. 18.	1931–537.	50
81.	1932.	Imperial No. 50.	1934–645–6.	51
82.	1934.	Royal " Standard," Model H.	1934–687.	51
83.	1935.	Underwood " Standard "	1934–659.	52

SPECIAL MACHINES (Not Classified)

No.	*Date.*	*Title.*	*Inv. No.*	*Desc., see p.*
84.	1895.	Hardy " Stenotyper."	1907–5.	41
85.	1910–16.	Grandjean " Stenowriter."	1936–437.	47

In the following Historical Notes and Descriptions it will be noted that the subject-matter is set up in two sizes of type. The larger type is used for historical matter and the smaller for the technical descriptions, in order that the reader who is not at the moment interested in the technical matter can follow the historical sequence by skipping those portions in the smaller type.

The Inventory Numbers which appear at the termination of the descriptions of exhibits in the Collection indicate the year of acquisition of the exhibit, and not the date of its production.

HISTORICAL NOTES
WITH
DESCRIPTIONS OF THE TYPEWRITERS EXHIBITED

In chronological order, with notes on allied mechanisms related to the development of the typewriter proper

Many of the early inventions enumerated were simply variations of the pantograph, mechanical hand-writing appliances, and particularly mechanisms to permit blind persons either to form letters as in writing or to read embossed letters or signs as in the Braille system. Descriptions of these allied inventions are included where the importance of the device warrants it. The arrangement of the Collection in groups is explained at the end of the preceding section, the Introduction.

Period up to 1830

All typewriter history commences with a British patent granted to a *Henry Mill*, No. 395 of 1714, for " an artificial machine or method for the impressing or transcribing of letters singly or progressively one after another, as in writing, whereby all writings whatsoever may be engrossed in paper or parchment so neat and exact as not to be distinguished from print. . . ." Mill was an Englishman, a prominent engineer in his day, and is stated to have been " engineer to the New River Water Company." No details of his invention have survived, and it is not known whether he proceeded further than the securing of a patent. Following Mill several primitive mechanisms were produced by inventors, such as those of *Von Knaus* of Stuttgart, at the time Director of the Physical and Mathematical Laboratory in Vienna, a writing machine between 1753 and 1760, and the *Graf von Neipperg*, Würtemburg, in Vienna, 1762. *Pingeron*, a French inventor, a machine in 1780 for the use of the blind, described in the *Bulletin de la Société d'Encouragement pour l'Industrie Nationale* for 1805. *Louis Jacquet*, a Swiss, resident in Neuenberg, about 1780. *L'Hermina*, French, a writing frame for the blind, in 1784. These were but simple devices, mainly dependent on hand manipulation. The first invention which can be accorded the designation " machine " was produced by *Pellegrino Turri*, of Castelnuovo, who in 1808 made a machine for the use of the blind Contessa Carolina Fantoni da Fivizzono. This printed in capitals 3 mm. high, the paper being adjusted by hand. *Pietro Conti*, of Cilavegna, made an apparatus in 1823 for which he made a claim that it " wrote fast and clear enough for anyone, even those with poor sight." It was demonstrated before, and tested by, the members of the Académie Française and eventually purchased by the Académie for 600 francs.

1. BURT "TYPOGRAPHER," 1829. PLATE I

This machine, invented by William Austin Burt, of Detroit, was the subject of the first United States patent (No. 259, July 23rd, 1829) relating to typewriters and was given the name of "Typographer" by its inventor. It was the first typewriting machine which is known to have been capable of practical work. A facsimile of a letter is shown, written by the inventor on his machine.

The model originally in the U.S. Patent Office was destroyed by fire in 1836, but a replica, to which the replica exhibited here is exactly similar, was constructed in 1892 from original manuscripts in the possession of the inventor's great-grandson, Mr. Austin Burt. This replica was exhibited at the World's Columbian Exposition in 1893.

The machine comprises a hand-operated type-carrying swinging sector attached to a lever pivoted for vertical movement. This is secured to a carriage, moved parallel to the paper-carrier for line spacing, the sector swinging at right angles to the carrier. The carriage is held in position for each line by a detachable double rack, giving wide or narrow line spacing as desired. The machine is capable of printing capitals, lower case, numerals, and other characters. A primitive automatic escapement control and a clock-dial indicator are fitted. The types are inked by contact with inking plates which are fed periodically with a hand roller with ink collected from a gelatine pad.

A letter referring to the "Typographer" appeared in the *New York Commercial Advertiser*, May, 1829, and it was praised in an editorial article. Burt was also the inventor of the "Solar Compass." *Inv. 1926–332.*

Period 1831-40

In 1833 an important contribution to development was provided by the machine invented by *Xavier Progin*, a printer of Marseilles, named by him a "Machine Kryptographique" and the subject of French patent No. 3,748 of September 6th of that year.

This is the first machine of the Down-Strike class, and had a circular type-basket furnished with type-bars striking down to a common printing centre on a flat paper-carrier. Progin claimed that it would write "almost as fast as a pen"; it must therefore have been too slow in operation for practical purposes and is also one of the inventions far before its time. The type-bars were operated by a ring of inclined wires attached by secondary links to the type-bars and hooked at their upper ends to enable them to be pulled upwards by the finger. This inventor's name is variously spelt in books and records as Projean, Progrin, and Progin, the last being the spelling in the patent specification.

Bidet, French, produced a hand-operated apparatus of the Type-Wheel class in 1837. A slow machine to operate. A further contribution of the first importance is provided by the efforts of *Guiseppe Ravizza*, a lawyer of Novara, Italy. From the age of nineteen, in 1830, Ravizza continued his work on mechanical writing until his death in 1885, his principal patents being those of 1855 and 1856. He produced his first machine, named the "Cembalo-Scrivano," in 1837, exhibited it at an exhibition at Novara in 1856 and also at the Turin Exhibition of 1858, where he was awarded a silver medal. He produced 12 models, numbers of these machines being sold by him, all made by his own efforts. He presented a machine to the Blind Institution, Milan, where it remained in use for some years.

Ravizza's machines were of the Up-Strike class, with type-bars hung round a circular type-basket, striking up to a common printing centre on the underside of paper carried in a flat rectangular frame. On reaching the right-hand margin a signal "End of Line" was exposed, and the return of the frame was effected by

pulling on a string and grip. Letter spacing was effected by the release of the key struck, by the use of a very original escapement. A type-guide was included to secure accurate alignment.

Ravizza tried out many ideas for inking, originally by the use of a silk ribbon impregnated with lampblack and later with black lead paste and prussian-blue dye. He then experimented with inking rollers against which the types rubbed during their movement to the paper, but he finally returned to the coloured ribbon, treated with aniline dye and glycerine, the ribbon fed by rollers set at the rear of the machine with their axes parallel to the printing line. Ravizza thus appears to be the inventor of the ribbon inking system. His first machine printed capitals only, but later ones were provided with means to print both capitals and lower-case letters. The keyboard had piano-like keys, not arranged alphabetically, but in order of frequency of usage. In conjunction with Carlo Fantoni & Co. he applied for a further patent in January, 1883, his model for this year being very similar to the Remington of the period; but it was only then (1883) that he became acquainted with the developments introduced by E. Remington & Sons, and was astonished to find many of his pet ideas already in use on their machines. However, he did not abandon work, but in 1884 produced his seventeenth model, after which he busied himself, until his death in 1885 at the age of seventy-four, on a machine intended to write in syllables.

Dujardin, of Lille, in 1838 produced a machine in two sizes, a small one for recording speeches and a larger edition of it intended to print music. His machine had 26 keys of piano type, arranged alphabetically, with the type striking to a common printing centre, but the paper was limited to 10 cm. (4 in.) in width. *Baron von Drais* of Sauerbronn (associated with the invention of the hobby-horse, or " Draisine," exhibited in Gallery XVI), produced in 1839 a primitive machine with 16 square keys. *Louis Jerome Perrot*, of Rouen, patented in 1839 a " Machine Tachygraphique," which was of the Type-Wheel class. The keyboard was divided into two portions, one for each hand, operating two separate type-wheels, the operation releasing a bar which struck against the type-wheel spindle and so struck the periphery of the wheel against the paper; an early example of the hammer strike system. *Baillet Sondalo* and *Coré*, of Paris, about 1840 produced a " Universal Compositor." This had an indicator manipulated by the left hand over an index board, whilst the right hand brought the paper into contact with a type-sleeve. *Alexander Bain* and *Thomas Wright*, later better known as the inventors of a telegraphic printer, produced about 1840 a very primitive apparatus for printing Morse characters for telegraphic purposes.

Period 1841–50

A further advance of importance was provided by *Charles Thurber*, of Worcester, Mass., who secured U.S.A. patent No. 3,228 in August, 1843, for a machine which he christened the " Chirographer."

It comprised a horizontal circular index wheel with vertical plungers carrying the types, mounted round the periphery, rotated into correct register and depressed to bring the type down on to the paper. This was mounted on a cylindrical platen cylinder which was provided with letter and line spacing, incorporating a ratchet pinion, and pinion and rack co-ordinated with the carriage. Inking was by an ink roller. This machine did good work but was slow in action.

Pierre Foucault, of Corbeil, produced in 1843 his " Raphigraphe " for the blind, Foucault being a teacher at the Paris Institute for the Blind.

It was of the Radial-Striking-Plunger class, and printed embossed letters successfully, being awarded a gold medal at the 1851 Exhibition in London. Several machines were constructed and remained for a long period in service in blind institutions in

various parts of Europe. In 1850 Foucault produced a second machine, called his "Clavier Imprimeur." This had 60 type plungers arranged in four rows, striking down on to the paper, and printed through a carbon sheet.

Between 1843 and 1850, *Professor William Hughes*, and also *Marchesi*, produced machines of which no details have survived. *Littledale*, of York, devised a machine in 1844 for printing embossed characters. There is evidence that ordinary printing could also be accomplished by placing a strip of cardboard beneath the paper and printing through carbon paper. The machine was exhibited to the members of the British Association, at York, in the same year by the Rev. W. Taylor. *Pape*, French, made a machine in 1844 having 24 keys and the paper carried by two rollers. To see the writing the keyboard, not the paper carriage, was raised. In the same year *Labrunie de Nerval*, of Paris, produced a primitive and peculiar machine called the "Stéréographe."

This made use of a series of type-wheels representing as many spaces as in the printed line, revolved by hand into correct register, inked by a roller, and the whole line printed at one impression, the paper being then moved ready for the next line.

Dr. Saintard and *Saint-Gilles*, French, made in 1845 a machine of which details are lacking. *Charles Thurber* patented a second machine in 1845 (U.S.A. patent No. 4,271). This had a flat platen and visible writing, and is claimed to have had the first differential spacing of the letters. It was, however, not a typewriter, but a writing machine performing the motions of the hand, and intended for the blind. *Gustave Froment*, French, in 1847 also produced a writing machine which was put on exhibition in Paris at the Conservatoire des Arts et Métiers. *Rohlfs* and *Schmidt* in 1847 produced a machine having the characters embossed on a rotary prism or sleeve, the paper being struck against the type by hammer impression. *Prentice*, also in 1847, made a machine of which details have not survived. *J. B. Fairbanks* was granted U.S.A. patent No. 7,652 in September, 1850, for a device which he called a "Phonetic Writer and Calico Printer." It does not bear much resemblance to a typewriter, but is interesting as having the first continuous roll paper feed. *Oliver T. Eddy*, of Baltimore, secured U.S.A. patent No. 7,771 in November, 1850, for a highly ingenious but cumbersome typewriting machine.

This had 78 keys disposed in four rows after the manner of an organ manual. The types were formed on the ends of vertical square plungers massed together as a rectangle of bars, moved by selector mechanism, and the selected bar thrust down upon the paper by a vertical piston rod. It is certainly one of the most complicated mechanisms devised for the purpose.

29. HUGHES TYPEWRITER FOR THE BLIND, 1850. Lent by Mrs. M. R. Wild

This is a very simple mechanism devised by Mr. G. A. Hughes, Governor of the Manchester Blind Asylum, of the Index class. The machine was awarded medals at the Exhibitions of 1851 and 1862.

As first designed the machine was intended for printing embossed characters, but was subsequently modified for ordinary printing through carbon paper, the example shown being of this later form. A circular index plate is provided with raised characters, to enable selection by blind operators, with a series of corresponding vertical

plungers, 43 in all, carrying the type faces. The index plate is rotated until the desired character is in position, and the impression made by the depression of a lever, operated by the left hand, the index plate occupying the right hand. Release of the lever causes the whole index carriage to travel for spacing. Line spacing is effected by a screw head in front of the machine, one complete turn of which advances the paper one line space. Inv. 1862–20.

Period 1851–60

Sir Charles Wheatstone, whose name is so closely associated with electrical research, produced in 1851 the first of a series of machines intended for the rapid printing of telegrams. His machines were of the Swinging-Sector class.

2. WHEATSTONE TYPEWRITER, 1851

This machine has a keyboard of piano type and prints on a paper strip. The types are mounted on flexible tongues of metal resembling the teeth of a comb; the comb is at the top of the machine and is segmental, the teeth radiating from a common centre to which the comb is pivoted. There is a small hammer above the comb and over the printing point. Each key forms one arm of a bell-crank lever, so that when depressed it forces forward the other arm into a horizontal slotted plate, connected with the comb and so arranged as to swing the latter until the particular type is under the hammer, which then delivers its blow. The comb is after each impression brought back to a definite position by two springs. As the key rises, a friction-grip catches the strip of paper and draws it forward through the space of a letter. The type is inked between each impression by a segmental pad caused to vibrate between the type-comb and the small well of ink. Both hammer and pad are actuated by a bell-crank lever attached to a bar running under the whole of the keys, by any one of which it may be depressed. Underneath the machine is a drawer to contain the reel of paper, which is mounted on friction rollers. The letters had to be kept small as the extremities of the comb require a considerable travel of the bell-crank lever to bring them into position. Inv. 1884–197.

Another step in development is shown by a machine patented by *John M. Jones*, of Clyde, N.Y., in 1852 (U.S.A. patent No. 8,980) and named the "Mechanical Typographer."

This had a horizontal revolving plate with vertical plungers round the periphery, the character index being round the edge of the plate, which was rotated to bring the desired character to register and the plunger pressed down upon the paper which was carried on a cylindrical platen roller provided with line spacing ratchet and space lever, and letter spacing. It is of the Index class and resembles Thurber's machine of 1843. It produced exceptionally good work.

R. S. Thomas, of Wilmington, N. Carolina, made in 1854 a curious little device of the Type-Sleeve class which employed a cylinder resembling a rolling-pin with several rows of characters at the centre and a corresponding series of rows of holes at one end. By placing the appropriate hole over a peg the desired character was brought to the paper. To some extent this seems to anticipate the introduction of the Type-Sleeve machine by Crandall in 1879. *John Cooper*, of Philadelphia, was granted U.S.A. patent No. 14,907 in May, 1856, for a machine of the Circular Index class, a selecting pointer being moved to the desired character and the impression being made by a hammer against the type-wheel. It also incorporated a cylindrical platen with feed rolls for the paper. This machine appears to anticipate the Hammond with hammer strike of 1880. *Alfred Ely Beach*, for many years an editor of *The Scientific American*, secured U.S.A. patent No. 15,164 in June, 1856, for a machine of great historical importance.

This machine printed embossed characters for the blind but only used a narrow ribbon of paper. The embossing was performed by two sets of type-bars, arranged round two circular type-baskets, the upper and lower type faces, being male and female, gripping the paper like a pair of tongs in the manner of the common embossing press used for letter headings. The machine is therefore of both the Up-Strike and the Down-Strike classes, with circular baskets. The keyboard had three rows of finger keys arranged as in the modern manner, an inking ribbon was employed, whilst escapement by clockwork was used for letter spacing, the release being operated by a cord tensioned by the movement of any key. These devices are in effect the functions of the modern universal bar and also of the spring-wind escapement. The machine did good work but was slow in operation, and although it attracted much attention when exhibited in New York, the limitation of the paper to a ribbon detracted from its usefulness and it did not emerge from the experimental state.

3. WHEATSTONE TYPEWRITER, 1856. Wheatstone Collection

This machine is an advance on the earlier one of 1851, in that it has a change of case, whereby it can print both capitals and lower-case letters. The comb is still retained, but forms part of the surface of a cylinder whose axis is the centre of a swinging segmental plate containing cams by means of which it can be swung into various positions. On an elevated keyboard are 26 round keys forced upwards by springs; each key carries a small pin on its side that engages with a separate cam groove in the segmental plate. By causing the keys for the symbols farthest from the printing point to act near the centre of the plate, it was possible to make the grooves similar in shape. Change of case is accomplished by mounting on the segmental plate a second comb that is brought beneath the printing hammer, by sliding it along the arbor, by a key provided for this purpose. The paper, folded by means of an apparatus shown, is placed on a cylinder; each key as depressed causes the cylinder by a pawl and ratchet-wheel to partly revolve. Line spacing is accomplished by the cylinder sliding along its axis, a rack below engaging with a spring flange on the cylinder acting as a cam. The type is inked by means of an annular inking pad that encircles the cylinder, and is rotated by a friction wheel. Inv. 1884–198.

3A and 3B.

Two folders to prepare the paper are shown adjacent. Inv. 1884–204 and 205.

4. WHEATSTONE TYPEWRITER, 1855–60

This machine is the final form designed by Sir Charles Wheatstone. It has the piano keyboard of his first, the paper cylinder and change of case of his second designs. The small middle key in front is for change of case and two side keys give spacing between words. Inv. 1884–70.

Dr. Samuel W. Francis, a physician of New York, secured U.S.A. patent No. 18,504 in October, 1857, for a "Printing Machine" of the Up-Strike class with circular type-basket, the type-bars operated by 36 keys arranged to print capitals and lower-case letters from a piano-type keyboard, one key being the spacer. It was said to print at a speed exceeding that of the pen, but was too cumbrous and costly for commercial use, and no attempt was made to manufacture. *Henry Harger*, 1854, produced a "Mechanical Typographer."

8. TYPEWRITER BY PETER HOOD, 1857. Lent by James Hood, Esq.

This is a primitive machine made by Mr. Peter Hood of Kirriemuir, Angus, N.B. The design is a combination of the circular index plate and type-wheel, geared together at right angles. A knob and pointer are moved round to the desired character and depressed, causing the type-wheel to strike downwards on to the paper which is mounted round a platen roller. The platen is traversed longitudinally by a toothed quadrant and escapement actuated by the down pressure on the type-wheel, whilst a hand-operated ratchet and pawl are provided for line spacing. Inv. 1930–273.

Guillemont, of Paris, a maker of mathematical instruments, patented in 1859 a machine of the Type-Wheel class with pad inking, which he claimed as being useful to the blind.

The last three inventions noted above are of no technical importance.

Period 1861–70

This period opens with two inventions which also are of little importance, by *Codville-Le Basée*, 1861, and *Flamm*, 1863, a machine designed to print in syllables.

An early example of the stenotyper class represented in the Collection by the later machines of Hardy (84) and Grandjean (85) was that of *Benjamin Livermore*, of Hartford, Vermont, with his U.S.A. patent No. 39,296 of July, 1863; six keys printing signs which, singly or in combinations, represent all the letters of the alphabet. *F. A. De May*, of New York, produced in 1863 a machine similar to that of Thurber in 1843.

30. CIRCULAR INDEX CLASS TYPEWRITER. Actual date unknown. Presented by E. C. Sculthorp, Esq.

The maker and date of construction of this typewriter are unknown, but from its appearance the machine may have been made between 1860 and 1870. The horizontal index disc carries 49 type-bars which slide in grooves cut in the disc, and which are normally held in position by small springs. Selection of the desired character is secured by rotation of the handle and gear sector, on the right-hand side, which gears with a pinion attached to the disc. Depression of the double lever on the left-hand side causes the selected type-bar to be moved forward and make the impression, and, as the type-actuating lever is released, a ratchet gear beneath the platen causes the carrier and paper to move one space into position for the next impression.
Inv. 1934–581.

21. ORIGINAL PRATT TYPEWRITER, 1864–65. Lent by the Yöst Typewriter Co., Ltd.

The leading details of this Radial-Striking-Plunger class machine were protected in 1864 by Mr. John Pratt, of Alabama, U.S.A. (Brit. Prov. Specn. No. 1,983 of 1864), and the typewriter itself was constructed by him, with the collaboration of a pianoforte manufacturer and a scientific instrument maker, at Glasgow, in 1865.

The single case of type is formed on the upper ends of 26 rods, arranged to slide in slots on the sides of a truncated cone, the apex of which is the common printing point; each rod has a projecting lug, by which it is pressed downwards by a ring weight, common to all, and can also be forced upwards by its key-lever, connected to it by intermediate levers arranged to secure uniform touch. The key-levers, including a spacing key, are grouped as in a piano keyboard, and each communicates by a vertical pin and lever with a transverse bar underneath. This bar has attached to it a vertical rod which actuates a ratchet wheel which gives the letter and word-spacing motion to the paper carriage on the underside of the lid which is closed down while writing is in progress. The paper was held, by a spring clip, in contact with carbon paper, and the small flat carriage contains a slide at right angles to its own guides. The return of the carriage, on completing a line, was accomplished by a lever, on the underside of the lid, having a knob projecting above through a segmental slot; line spacing was obtained by pressing a similarly situated knob. Pratt abandoned this typewriter in favour of his type-wheel design, the "Pterotype" (see Inv. 1893–185), in 1866, which attained historic importance.
Inv. 1903–6.

Peter Mitterhofer, of Kufstein, Austria, between 1864 and 1866 made several machines of the Up-Strike class with circular type-basket;

in 1864 a device to perforate characters in paper ; in 1866 a machine priced at 80 kroner ; and a third model which was sold to the Polytechnic Institute of Vienna for 60 kroner. The remains of one of his machines is preserved in Vienna (see photograph, Inv. 1934–634).

9. COX TYPEWRITER, 1860–70

This typewriter is said to have been made by a Mr. John Cox. The type-wheel is rotated until a pointer indicates that the desired letter is in position. The knob is depressed and the type-wheel moved downwards on to the paper. A vertical rod with a small roller working on a cam is then depressed ; a pawl engages with the rack and the type-wheel assembly is moved forwards.

Inking is by means of a small roller pad which moves up under the type-wheel when the latter is raised and moves back when it is depressed. The paper passes over a strip of ebonite on the brass baseplate ; the paper may have been held by clips to the baseplate. Inv. 1915–354.

Another machine of importance in development was that of *George House*, of Buffalo, N.Y., in 1865. A machine of the Up-Strike class with circular type-basket.

The cylindrical platen roller was provided with a circular, in distinction to the usual linear, movement, the length of the line being determined by the portion of the circumference of the roller occupied by the exposed part of the paper. It had a two-row banked keyboard with 41 keys.

Abner Peeler, of Webster City, Iowa, was granted U.S.A. patent No. 57,182 in August, 1866, for a peculiar device which he designates a " plate printer." It printed 81 characters by means of a selector and square index. It is of no technical import.

10. PRATT TYPEWRITER, 1866. PLATE I

This machine, of the Type-Wheel class, was made by John Pratt of Centre, Alabama, U.S.A., and patented by him in Great Britain in 1866, and in U.S.A. in 1868 (No. 81,000). Pratt coined the name " Pterotype " (winged type) for his invention, and it was the first practical type-wheel machine. Some were made for him by E. B. Burge, of London.

The 36 characters are mounted in three rows of 12 each on a vertical type-wheel. Against this wheel a hammer strikes, so that an intervening paper with a carbon sheet receives the impression of the type. The paper is carried in a vertical frame which moves automatically after each letter is impressed, but the word spaces are given by partially depressing any one key. The movement of the type-wheel and of the paper-holder is caused by the action of two springs, which, at the completion of each line, are wound up by depressing a large key. At the lower end of the type spindle is a circular case from which any one of the 12 stops will be projected by depressing its key, but for the second and third rows of symbols on the type-wheel the wheel is lifted at the same time. Pressing down any letter key only sets in position a stop for the type-wheel and delivers a uniform blow with the hammer, the rotation of the wheel being made by the spring. Inv. 1893–185.

Fontaine, of Paris, barrister-at-law, in 1867–69 a machine with type on a rotating disc, of the Type-Wheel class, operated electrically and provided with 47 keys, printing through a ribbon. *R. Allen*, a machine in 1867 for which he made the claim that it wrote " much faster than the pen." Details are lacking. *Thomas Hall*, of Brooklyn, N.Y. (U.S.A. patent No. 65,807 of June, 1867) discloses an interesting design of the Index class, a later model of 1881 is described (31) (see Period 1881–90).

Sholes and *Glidden*, 1866 to 1873.

The results accruing from the work of Christopher Latham Sholes (Plate II), Carlos Glidden, and Samuel Soulé, together with their associate James Densmore and the help and suggestions provided by Matthias Schwalbach and others amongst the skilled mechanics of Kleinsteuber's machine-shop in Milwaukee, represent by far the most important step in the evolution of the modern typewriter. In 1866 Sholes and Glidden were at work developing a machine for numbering consecutively the pages of books, when Glidden one day remarked " why cannot the paging machine be made to write letters and words, and not figures only ? " In the following year, 1867, an article in *The Scientific American* describing Pratt's " Pterotype " typewriter (10) fell into Glidden's hands, and he at once showed it to Sholes. Another version of the story is that General W. G. Le Due, who had been interested in the idea of the typewriter since 1850, suggested the idea to Sholes and Glidden.

However it was that it came about, from then onwards we find Sholes, Glidden, and Soulé working on the idea of evolving a writing machine from the paging machine. The experimental work was carried out at Kleinsteuber's machine-shop. The first working model (Plate III) was finished by the autumn of 1867, and U.S.A. patent No. 79,265 was secured in June, 1868. This was a crude mechanism with piano keys, but it did operate rapidly.

In March, 1868, James Densmore became interested, took over a share in the patent in return for a sum defraying all costs to date, and shortly afterwards Soulé dropped out of the team.

The second patent taken by Sholes, Glidden, and Soulé, No. 79,868 of July, 1868, shows a greatly advanced design over their first patent, while a further patent for improvements was secured in August, 1871 (No. 118,491).

Densmore was a first-class business man of great enthusiasm, and his somewhat drastic criticism and drive was invaluable in the " moral " encouragement of Sholes all through the years of experiment and partial failure. Sholes himself was of too modest and retiring a disposition to have persevered in the face of such difficulties. Some 25 to 30 separate trial mechanisms were constructed and tested to destruction, some of Sholes's friends, reporters, and others, helping by trying the models in actual service, showing up their defects, until by the end of 1872 a form of mechanism had been arrived at which was sufficiently developed to be fit to use as a demonstration machine with the intention of finding some suitable manufacturer (Plate II).

Period 1871–80

22. HANSEN " WRITING BALL," 1870–75. PLATE III.

Presented by P. Jensen, Esq.

Pastor R. J. Malling Hansen, who was Superintendent of the Royal Institution for the Deaf and Dumb, at Copenhagen, produced this machine of the Radial-Striking-Plunger class, and for it was granted

British patents Nos. 1,385 of 1870, 823 of 1872, 1,706 of 1875, and U.S.A. patent No. 125,952, in April, 1872. It is said to have been the first machine to have been actually manufactured and sold to the public.

Fifty-two type-plungers, including one for spacing, are arranged on a portion of a sphere having an insulated cover and let into a hinged frame by which it can be lifted out of the way; the whole is supported by a metal base. The plungers radiate from the printing point at the centre, where the paper, with a carbon sheet over it, is clamped on a carriage with a shrouded rack on the underside to give letter spacing. The spur wheel which gears into it has a feather and slides on a shaft which is driven by clockwork; on the shaft is an escape wheel controlled by an electro-magnet, the circuit of which is closed every time a key is depressed. The paper carriage rolls on rails on a frame which slides on guides at right angles to the rails to allow of line spacing. For this purpose there is on the paper carriage a hinged spring tongue with an inclined face which at the end of a line comes in contact with fixed pins on a bar, and in doing so the carriage is forced up a line space, carrying with it the frame. Subsequently mechanical letter spacing was devised and the machine brought into a more compact form. Inv. 1906–9.

Thomas A. Edison, the well-known inventor, took out U.S.A. patent No. 133,841 in December, 1872, for an electrically operated Type-Wheel device which is claimed to be the origin of the modern "stock-ticker" tape machine.

We now return to the work of *Sholes* and *Glidden*, whose final model (see Plate II) was taken by James Densmore (who took with him G. W. N. Yöst to help in his advocacy of the invention) to E. Remington & Sons, the famous small arms manufacturers, in February, 1873. Remington's had turned portions of their armament factory to industrial manufacture of such things as sewing machines, and were fully equipped for the development of mechanism such as is called for in typewriter manufacture. The demonstration might easily have come to nothing had it not been for the enthusiasm of H. H. Benedict, treasurer of the Sewing Machine Department, and of W. J. Jenne, the works superintendent, who urged Philo Remington to take up the machine, Remington being dubious as to its value.

The outcome was a contract, signed on March 1st, 1873, to manufacture machines for the interested parties. The Remington staff proceeded to put the mechanism into suitable shape for manufacturing purposes, which necessitated the provision of many detail improvements, by W. J. Jenne, J. M. Clough, and B. A. Brooks in particular, actual manufacture commencing in September and the first machine dispatched from the factory early in 1874. Although the machine might with justice have been called the "Sholes-Densmore," it was at first known as the Sholes and Glidden typewriter, becoming known as the No. 1 Remington (37) in 1876, and the No. 2 Remington, with change of case (38 and Plate IV), in 1878.

36. SHOLES AND GLIDDEN TYPEWRITER, 1874–76. PLATE IV. Presented by Lady Brassey

As will be seen from the particulars printed on the front cover and lid, shown detached, this typewriter is one of those manufactured by E. Remington & Sons under the agreement entered into on March 1st,

PLATE III

28 MAY 1940

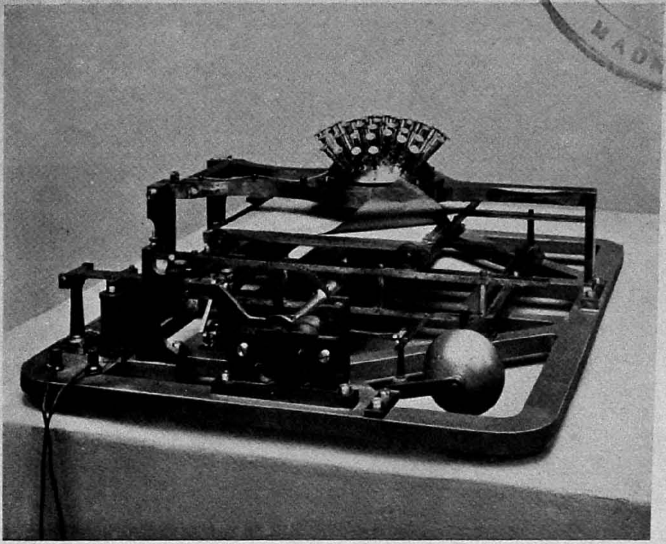

HANSEN'S "WRITING BALL," 1870–1875.
"An example of the Radial-Striking-Plunger Class."

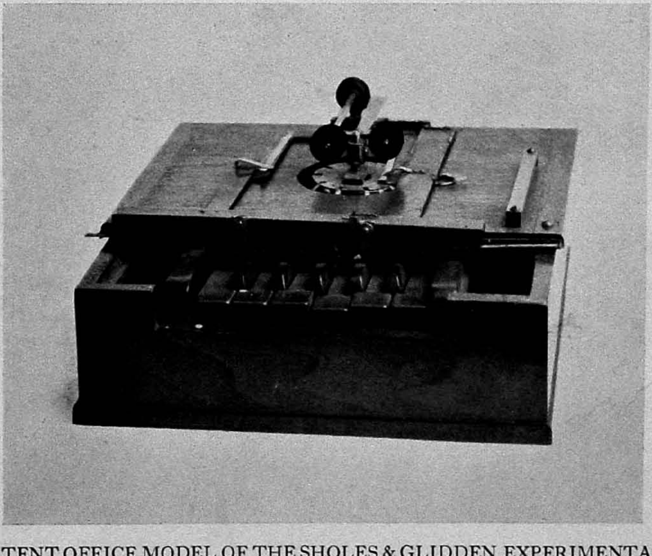

PATENT OFFICE MODEL OF THE SHOLES & GLIDDEN EXPERIMENTAL TYPEWRITER OF 1868
"By courtesy of the Smithsonian Institution, United States National Museum, Washington, D.C., where it is exhibited. No. 251,210."

23 MAY 1940

PLATE IV

SHOLES & GLIDDEN TYPEWRITER, 1874–1876.
" *Showing the machine as manufactured by E. Remington & Sons for Sholes & Glidden.*"

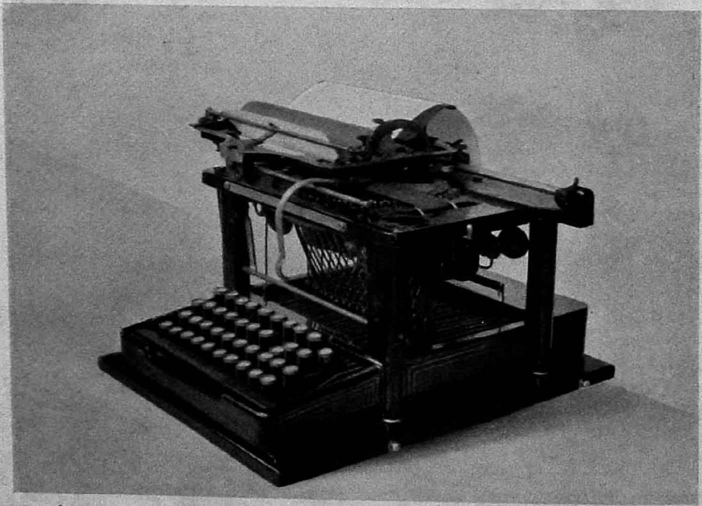

REMINGTON No. 2, 1878.
" *The first typewriter to accomplish change of case by shift-key and platen shift.*"

1873. From its serial number, 2,619, it would appear to have been made late in 1875. This was the first sufficiently rapid typewriter but wrote in capital letters only.

The type-bars hang vertically round a circular opening in the top of the frame, so that the types strike upwards under the platen at a common printing centre. The design is practically identical with the final Sholes and Glidden model. Being made in the sewing-machine department of the Remington works, that influence is very apparent.

There are 44 keys, connected by horizontal levers and vertical wires to the same number of type-bars. The platen cylinder is supported in a carriage which slides on a rod at the back and is supported by a wheel in front. The paper, limited to a width of 8·25 in., passes under the platen cylinder, with which it is held in contact by two rubber bands passing round rollers on the carriage. To inspect the work the carriage can be swung upwards round the guide rod which acts also as a hinge. The carriage is continuously pulled to the left by a spring, the motion being checked by a rack attached to the carriage, and engaging with two detents that release one tooth with each character printed. At the end of a line, the carriage is returned, and line spacing effected, by a cord attached to an external drum operated by a lever at the right-hand side ; this return movement also winds up the carriage traversing spring. Inking is effected by a wide ribbon, interposed between the paper and the type. The ribbon stretches horizontally over the top of the framing from a spool on each side, and is slowly wound alternately from one to the other by the motion of the machine ; the reversal of the winding when either spool is emptied is performed by a hand-moved clutch. The arrangement of this keyboard has since been adopted in nearly all typewriting machines, and is now known as the " Universal." In front of the four rows of keys is a long space key. Inv. 1881–55.

It is interesting to remember that both Sholes and Glidden had been compositors, and were therefore little interested in the alphabetical arrangement of the cases, and when, in the course of developing their various models, they found that serious clashing of the type-bars occurred even at moderate speeds, Densmore and Sholes conceived the idea of arranging the keyboard so that the letters which most frequently occurred together were placed as far as possible apart in the type-basket. Amos Densmore asked his son-in-law, who was at the time superintendent of schools in Western Pennsylvania, to make a list of the frequency of juxtaposition with which the letters in written English occurred, and this list formed the basis on which the " Universal " keyboard was ultimately arranged. It is not by any means perfect, but at this date it is difficult to envisage a change.

Frequently in histories Sholes is lauded as the first inventor of the typewriter as a practical machine, and as having supplied the chief portions of the mechanism for the first time. What is the truth as regards his work ? As is usual in evolution many prior inventors had contributed an important share to the final design. In this instance; for example, the Up-Strike type-bar system with circular type-basket had been used by, amongst others, Ravizza, 1837 ; Beach, 1855 ; Francis, 1857 ; Mitterhofer, 1866 ; and House, 1865. The similar but Down-Strike system with circular type-basket by Progin, as early as 1833, and Beach, 1855. Finger keys arranged in rows in bank by, amongst others, Wheatstone, 1856 ; Beach, 1856 ; and House, 1865. The cylindrical platen roller, with various methods of letter spacing and line spacing, some primitive, some quite advanced, by Thurber, 1843 ; Jones, 1852 ; Cooper, 1856 ; Wheatstone, 1856–60 ; Francis, 1857 ; and House, 1865. Writers generally lead us indirectly to infer that Sholes was entirely ignorant of these prior inventions. Even if

this were so, are we to believe that all through the experimental period from 1866 to 1873, the only contact which Sholes and Densmore made with prior patents and inventions was the article on Pratt's "Pterotype"? It appears very unlikely that an acute business man such as Densmore would take a share in the patent, even before he had seen the machine, but only a sample of its work, and then go on to sink capital in experimental development without acquainting himself with, at the least, the patents already taken out. There is in fact little that is original in Sholes's invention, the fact of great and outstanding importance being that he continued his experiments until he had evolved a key system and linkages to the type-bars, coupled with the "Universal" arrangement of the keys, which enabled the device to type *rapidly* and without fouling of the type-bars. There lies the secret of his success in the production of a "practical" typewriter, coupled with the equally important fact that the time was rapidly approaching when conditions became favourable for the invention to take root and flourish in the business world. Unless the time is propitious invention is doomed to failure, and it is as useless, so far as personal success is concerned, for an inventor to be before his time as to be after it. The invention and the psychological moment must coincide. Before the introduction of organised industrial and scientific research, a modern movement, the contact between inventors and practice was often of a most casual nature. Rarely does the human mind conceive a clear-cut idea and pursue it from its inception to ultimate final development, and so it was with Sholes and his friends; a casual reading of an article, a suggestion that the paging machine might be developed, the part played by Densmore, very much that played by Matthew Boulton to James Watt, the propitious time of the invention, and the fact that apparently for the first time we had a mechanism capable of such rapidity in work that it secured the participation of a manufacturer of national repute during the early commercialisation of the invention.

37. REMINGTON TYPEWRITER, No. 1, 1876

The Sholes and Glidden typewriter became known as the No. 1 Remington in 1876. The design is generally similar to that of the Sholes and Glidden, as manufactured by Remington's, but now incorporates a lever for lifting and returning the platen and carriage in place of the somewhat clumsy side lever method of the earlier machines. Between 1876 and 1878 a certain number of the No. 1 model were built in open form, the top platen and carriage on four pillars instituting a design very similar to that of the No. 2 Remington shown adjacent. Inv. 1930–108

38. REMINGTON TYPEWRITER, No. 2, 1878. PLATE IV.

Lent by Colonel Stuart Wortley

The Model 2 Remington was a development of the No. 1 (adjacent), from which it differs chiefly in having a shift key giving change of case to print capitals and lower-case letters. By this and other detail improvements it became a complete typewriter suited for general work, and its adoption in the commercial world was eventually secured.

26 MAY 1940

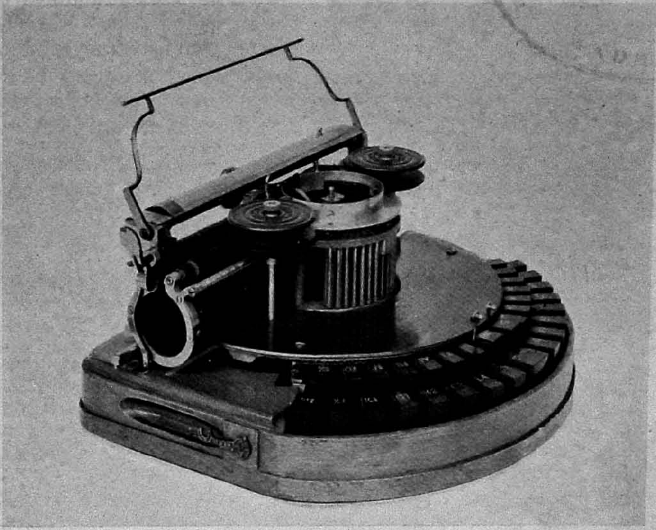

HAMMOND "IDEAL," 1884.
"The most successful typewriter of the Swinging-Sector Class." (*Known to-day as the "Varityper."*)

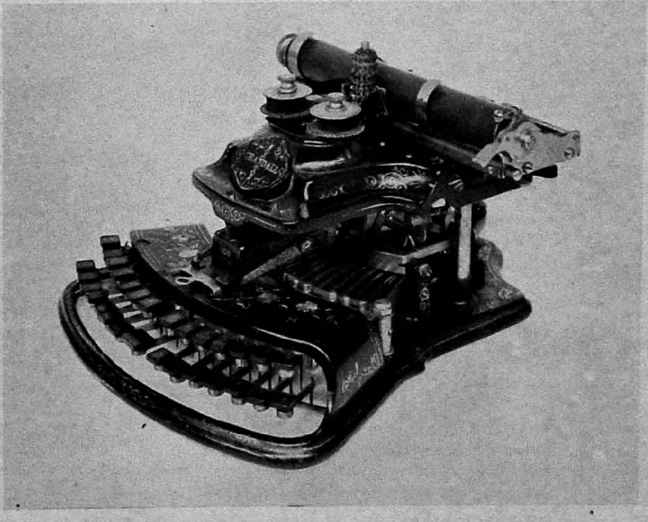

CRANDALL MODEL No. 3, 1893.
"The first popular typewriter of the Type-Sleeve Class."

MAY '40

PLATE VI

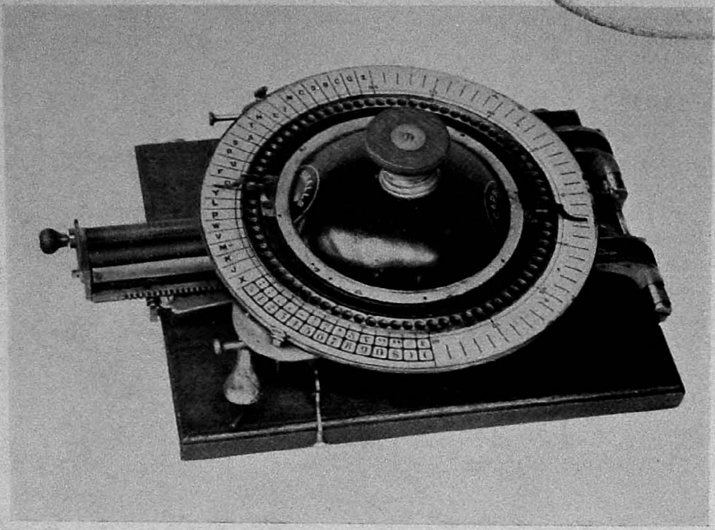

" VELOGRAPH " TYPEWRITER, 1887.
" A typical machine of the Circular-Index Class."

BAR-LOCK, No. 7, 1889.
" A representative of the Down-Strike-from-Front Class."

The "Universal" keyboard is furnished with 38 keys giving 76 characters by shift key, which moves the platen laterally in its carriage, and so alters its position with reference to the printing point of the type-bars, which are each furnished with two characters. To raise the carriage and platen and so make the writing visible a handle is provided, this being also used to traverse the carriage back and also to revolve the platen for line spacing. Inv. 1880–62.

5. HAMMOND "IDEAL" TYPEWRITER, 1884. PLATE V. Presented by Philip Sturdy, Esq.

The Hammond, which to-day, known as the "Varityper," is the sole successful survivor of the Swinging-Sector class, was introduced by James Bartlett Hammond of Boston, U.S.A., who secured a patent (U.S. No. 224,183), in September, 1880, and British patent No. 5,719 in 1883, the first model being placed on the market in 1884.

In the original design two sectors of a circle are utilised, each operated by one-half of the keys. The Hammond has always had strong advocates due to the ease with which different type-sectors may be substituted, giving an infinity of type faces and alphabetic systems. The earlier examples of the Hammond "Ideal" had a semi-circular keyboard, but later models, illustrated by the Folding Portable of 1923 (see Inv. 1923–1489), had the "Universal" keyboard. Impression is made by a hammer striking the paper against the type-sector. Inv. 1931–281.

Period 1881–90

Thomas Hall, whose earlier patent of 1867 has been mentioned (Period 1861–70), secured a further British patent, No. 827, in 1881 for the following—

31. HALL TYPEWRITER, 1881. Presented by Major W. G. A. Bedford, M.B., R.A.M.C.

The fount is formed by a square sheet of rubber, from the lower face of which the characters project; it is carried on a frame free to slide horizontally in any direction, but prevented from rotation. The index is in a similar frame, above, provided with holes for each character. By a handle, carrying a key fitting these holes and connected to the lower moving frame, the desired character is placed over the printing point and then depressed. The inking is done by a saturated textile sheet, arranged between the rubber type and the paper, a mask with a single hole at the printing point preventing accidental contacts. The paper is carried on a platen cylinder, capable of rotary and longitudinal motion, and the feed is performed by an escapement, worked by the printing handle and gearing into a cylindrical rack. The line spacing is given by a separate key which moves a ratchet wheel on the paper roller. Inv. 1899–10.

L. S. Crandall, after some years of experimental work, was granted British patent No. 3,253 in 1879, and U.S.A. patent No. 251,338 in December, 1881, for his design of Type-Sleeve class machine, developed subsequent to the agreement reached with Pratt and Hammond. The No. 3 of 1893, which was the best known of Crandall's designs, is referred to later.

Following upon the placing on the market of the Remington No. 1 and No. 2 Models progress in competitive design was rapidly accelerated, various principles having their staunch adherents. One of these was the full-keyboard class with a separate key for every letter and sign. These machines, with the double- as distinct from the full-keyboard, had a considerable vogue until finally the "touch" system of typing ousted the "sight" system, and enabled the shift-key method of change of case to render the double- and full-keyboard designs obsolete. The first of these was the—

39. YOST "CALIGRAPH," 1880–83

The Caligraph, produced by G. W. N. Yöst, after severing his connection with the Remington, was the first full-keyboard typewriter, developed in 1883 by Yöst and F. X. Wagner, the latter later becoming prominent as the inventor of the Underwood. The Caligraph Patents Co. was formed in 1880, the first model produced only printing capitals, with a keyboard of 48 keys. Manufacture was undertaken by the American Writing Machine Co., and resulted in the model here shown in 1883.

This has a full keyboard of 72 keys, printing capitals, lower case, figures, and signs. Two space keys, at either side of the keyboard, are intended for operation by the little finger of either hand. The machine has an automatic ribbon movement, the usual platen controls, and a warning bell.

The Caligraph was not known on the European market until the Model 2 of 1890 and the Model 4 of 1895 were produced. These models had smooth round platens in comparison with the polygonal shape of the earlier models, with flats for each line space. Inv. 1930–105.

An invention of great importance in modern design was the Semi-Front-Strike system introduced by *E. E. Horton*, who was granted U.S.A. patent No. 285,265 in September, 1883. This was the first of the machines of the type-bar class to secure fully visible writing though, of course, not an entirely new principle, since both type-wheel, type-sleeve, and the index class machines have moderately or fully visible writing. The Horton was built in Canada, but was not made to any extent, the top-strike principle commanding more attention at that period amongst inventors and possible manufacturers.

32. "HAMMONIA" TYPEWRITER, 1884. Presented by C. A. Palmer, Esq.

This typewriter, patented in 1884 by Mr. H. A. H. Guhl, is one of the early German contributions. It is intermediate in character between the earlier machines for the blind and the dial machines, and is of the Linear Index class. The fount of 45 characters is on the edge of a thin straight blade provided with a handle and guided in a frame sliding on a bar at the back. The desired character is brought to the printing point by sliding the blade till an index pin is over the corresponding character on a fixed tablet; this pin also assists the alignment by fitting between teeth on the tablet. Letter spacing is obtained from a ratchet on the frame, which is forced down by the blade into gear with a stationary rack. The platen is a narrow strip of soft metal, over which the paper is fed by two rollers, one of which has a ratchet lever for giving the line spacing. The top roller can be released by a lever at the left side when the paper is to be inserted. Inking is done by a ribbon, which is fed along by a ratchet at each depression of the blade. Inv. 1904–10.

48. DAW AND TAIT TYPEWRITER, 1884. Presented by Captain W. H. France

This typewriter was provisionally protected by T. G. Daw in 1869 and patented by T. G. and H. Daw in 1884. It was primarily intended for forming stereotypes and embodies differential spacing. It represents the Down-Strike class with circular type-basket.

The type-bars strike downwards on to a cylindrical platen upon which the paper is wound. Beneath the paper is a sheet of carbon paper, so that the printing is done on the underside and is, of course, not visible until the paper is removed. On the end of the spindle carrying the platen is a fine-toothed ratchet wheel, and the ratchet which works on this is operated from a toothed ring on the frame of the machine. Each tooth corresponds with a character and one edge of each is inclined to the vertical by an amount depending upon the width of the corresponding character. When a key is depressed a small lever moving in a vertical plane rubs on the inclined edge of the tooth and causes the ring and consequently the platen to rotate through the desired amount. The spacing can be varied throughout by advancing or retarding the ring so that the movement imparted to it by the levers is reduced or increased. Rotation of the platen causes its longitudinal movement along the spindle by the action of a pin working in a helical slot. The carbon paper is wound upon two rollers within the

platen and passes from one to the other round its outside. The worn-out portion may therefore be wound on to one roller and a fresh surface brought into place. Correct positioning of the type-bars is secured by means of a hollow guide in the centre of the machine. *Inv. 1925–430.*

Competitive design now broadens rapidly as more and more inventors and designers enter the typewriter field, and, from this date onward, it will only be possible to pick out designs which illustrate important technical developments.

One of the earliest of the new group of inventors was *Charles Spiro*, later identified with the design of the Bar-Lock typewriter, who, whilst developing the design, in the interim in 1884 patented and in 1885 introduced the "Columbia" Type-Wheel class machine, which attained to considerable popularity. His British patent is No. 14,768 of 1884.

11. "COLUMBIA" TYPEWRITER, 1886. Presented by A. E. Morton, Esq.

The 72 characters are arranged on the edge of a vertical type-wheel, carried loosely on a horizontal arm and provided with a handle by which the wheel is turned and the arm depressed to print. A dial, driven by the type-wheel, indicates the letter selected. It did good work and was provided with differential spacing.

Inking is by a circular pad swinging from under the disc as the latter is depressed.

The carriage has a single rubber-covered roller of 0·4 in. diam., and a sheet metal clip. An adjustable margin stop and a bell are arranged in the body casting, and an eight-toothed wheel gives the line spacing. Differential spacing is obtained by the use of a finely pitched rack, into which engages a pawl carried by a lever driven by a cam plate on the back of the type wheel. This cam determines the amount of feed for each letter, which varies from one to three teeth according to width ; the cam is somewhat simplified by the grouping of the symbols.

Inv. 1894–178 and 1926–788.

We come now to the introduction of two new classes in the arrangement of the type-bars. Firstly, the Down-Strike-From-Rear class, with the—

54. FITCH TYPEWRITER, 1886. Lent by the Fitch Typewriter Co.

This machine was introduced by M. Eugene Fitch, of Des Moines, Iowa, U.S.A., and is stated to be the second design of type-bar machine to have visible writing. Modified models were brought out in 1887 and 1889. The 26 keys print 78 characters by double shift. The type is normally at rest in a horizontal row at a height of 3 in. above the platen, moving downwards and along an inclined guide into a central notch which steadies the type-bar while printing. On entering this notch the type presses upon a small inking roller which then swings aside and allows the inked type to reach the paper. The paper is held in a metal scroll in front, and is pressed upon the printing roller over which it passes to a similar holder behind. In the machine shown the characters resemble script. Inv. 1892–102.

Secondly, the true Front-Strike class, which begins with two almost simultaneous patents: (1) *Prouty* and *Hynes'* U.S.A. patent No. 389,854 of January 5th, 1887, with the type-bars arranged in a semi-circular basket, striking to the horizontal centre line of the platen. This design introduces the vertical shifting of the platen carriage for change of case. (2) *A. Grundy's* U.S.A. patent No. 404,833 of January 18th, 1887, very similar in general design to the preceding machine, but differing in the method of type operating, having an intermediate bell-crank action with two pull links, whilst the Prouty

and Hynes had push-link operation. Neither of these machines was actually manufactured.

33. " VELOGRAPH " TYPEWRITER, 1887. PLATE VI

The Velograph is an example of the Circular Index class, and is stated to have been the first typewriter made in Switzerland. A later model was manufactured by A. P. Eggis of Freiburg. The design is a forerunner of the " Eureka " and similar toys, but was intended for serious use in correspondence. Inv. 1930–244.

40. REMINGTON TYPEWRITER, No. 5, 1888. *Presented by* W. A. Woodward, Esq.

This machine shows one of the stages in the development of the Remington series of models. After the introduction of Model 2 in 1878, the Nos. 3 and 4 continued with the incorporation of slight improvements. The No. 5 was specially designed for the continental market, being provided with 42 keys to print 84 characters, in comparison with the Model 6, having 39 keys printing 78 characters, which was intended for the English and U.S.A. markets. The platen of the Model 5 is also longer, due to continental papers being generally wider than the standard quarto size. Model 6 also incorporated several improvements in details. Two shift keys are provided, set at the top right-hand and lower left-hand corners of the keyboard. Ribbon feed and reverse is provided, with a subsidiary lateral movement of the ribbon so as to use the whole area during its life. Inv. 1931–276.

18. MUNSON TYPEWRITER, 1889

This was the invention of S. J. Siegfried, of Chicago, and J. E. Munson, of New York; the subject of U.S.A. patent in September, 1889; and manufactured by the Chicago Writing Machine Co., Chicago, U.S.A. Model 2 appeared in 1897. The Munson was a light weight and cheap machine embodying many features of the larger type-bar machines. In this design the type-sleeve is cast in metal as a series of washers each with one row of characters round the periphery, and is not made of vulcanite or fibre in the more common manner of the period. The sleeve is 1·6 in. long and 0·6 in. in diameter, and is very light. The sleeve with its axis is mounted parallel to that of the platen. Hammer strike for impression is used, the force of the blow being adjustable. Depression of any key-lever first moves the sleeve longitudinally into register, and secondly rotates the sleeve to bring the desired character into register.

The " Universal " keyboard is used with 30 keys giving 90 characters, three to each key-lever by double shift; later models had 96 characters. The upper shift key gives figures by rotating the sleeve through one-third of a circle, the lower shift key giving capitals by a two-thirds rotation. The writing is somewhat shielded by the sleeve. Line spacing to four positions is provided on the left-hand side of the carriage. The ribbon movement is at right angles to the platen and sleeve axes. Inv. 1930–109.

The Down-Strike-From-Front class commences in 1889 with the—

49. BAR-LOCK TYPEWRITER, No. 7, 1889. PLATE VI. Presented by the Royal Engineers Institute, Chatham.

The Bar-Lock, provided with a double-keyboard, was patented in 1889 by Charles Spiro (U.S.A. patent No. 400,265), maker of the " Columbia " Type-Wheel machine. It was manufactured by the Columbia Typewriter Manufacturing Co., of Newport, U.S.A. The name " Bar-Lock " is derived from the provision of guides arranged so as to prevent displacement of the type-bars in striking, 11 guides being provided for machines intended for the English-speaking markets, and 15 for the continental market.

The type-bars are mounted on two rows of bearings in a semi-circular basket, necessitating the use of long and short bars, set alternately, and actuated by the key-levers through a draw link with a spring return. The double keyboard of 78 keys is arranged with capitals in the upper central region, lower-case letters below, and signs and figures about the two sides. A margin release is provided. The ribbon has automatic feed and reverse, the spools being mounted with their axes horizontal and below the type-basket.

A later model, No. 15, of the Semi-Front-Strike class is shown in Group 4c.

Inv. 1915–32.

41. YÖST TYPEWRITER, No. 1, 1889

After severing his connection with the Caligraph in 1888, G. W. N. Yöst brought out the Yöst No. 1 to meet a demand by the American Press for a machine which would print in perfectly straight lines, and for the elimination of the inking ribbon and the shift key. This necessitated the use of a type-guide, since unguided type-bars are liable to slight derangement through strain and collision.

The type-guide, in the form of a square hole through which the type struck the platen, made the touch heavy. The machine was developed by A. Davidson, A. W. Steiger, and J. Felbel, and sought to avoid infringement of various patents, principally those of the Remington Co., from whom Yöst finally secured a licence. A circular inking pad is used in place of a ribbon, and achieved some popularity due to troubles associated with the earlier forms of ribbon movement which had not an automatic reverse. The Yöst retained a measure of popularity in Europe long after it had failed to hold its place on the American market. The full-keyboard provided has 78 keys.

Inv. 1928–1352.

A further class, the so-called Grasshopper movement, was introduced by the—

58. MASKELYNE TYPEWRITER, 1889. Presented by W. H. Thompson, Esq.

This is a design which embodies differential spacing of the characters, accomplished on a type-bar machine, and was evolved by Mr. J. N. Maskelyne and his son, well known in connection with their illusionist and conjuring exhibitions at the Egyptian Hall. The mechanism is complicated and the design did not attain to commercial success, probably due to the high cost of production.

Inking is effected by a pad, the action of the key mechanism being first to lift the type-bar from the pad and then cause it to travel upwards and forwards and then downward to the platen surface. Three shift keys are fitted and the arrangement is such that whichever of the three is locked, the carriage can be shifted to either of the alternative settings by the depression of another of the shift keys, but returns once more to the locked position upon the finger being removed. A later design is exhibited adjacent (see Inv. 1921–69).

Inv. 1913–683.

50. "ENGLISH" TYPEWRITER, 1890. Lent by the English Typewriter Co.

In this machine, invented by Messrs. M. Hearn and M. Donne, there are 29 type-bars, each carrying three symbols, operating by double shift. Spacing is obtained by the use of a spiral spring contained in a drum round which a chain winds. A pin can be inserted into any one of a series of holes in this spring box, and so cause a bell to sound when the desired length of line has been reached. This machine achieved only moderate success and was superseded by the North typewriter (see Inv. 1895–80).

Inv. 1891–163.

42. DENSMORE TYPEWRITER, 1891

This machine was produced by James Densmore, whose influence in connection with the work of Sholes and Glidden has already been mentioned. Densmore considered the improvements which he projected of sufficient importance to warrant the severance of his interests with the Remington Co. The most important change in the Densmore, which is generally similar to the Remington, was the method of strike by the type-bar. The key-lever is not directly linked to the type-bar but to an auxiliary lever which drives the type-bar, and to which it is yoked with sufficient freedom to permit the type-bar to continue travelling after the auxiliary lever has stopped, and so to make the actual strike by the momentum of the type-bar. This scheme, in various forms, is incorporated in many modern machines to secure " staccato " touch, with lighter finger tap.

Another improvement introduced later was the provision of ball bearings for the type-bars. The platen and carriage are quickly detachable for cleaning and adjustment. The writing is made visible by lifting the carriage, as in the Sholes and Glidden and the Remington designs. The carriage is provided with a " very fast " contiol to facilitate rapid typing, and had a back-spacer key and also a "justifier" whereby the spacing is reduced to allow a word of, say, four letters to be got into the space of three for line finishing and in corrections.

Models with 38 keys were produced for English-speaking countries, or with 42 keys, as here exhibited, for the continental market. Inv. 1928–591.

59. WILLIAMS TYPEWRITER, 1892–94. PLATE VII

The Williams typewriter was the most successful of the " Grasshopper " movement class, giving complete visibility, and, when put on the market in 1892, was the smallest practical machine produced up to that date. The design was the subject of patents ranging from 1875 to 1890 (for the latter, see U.S.A. patent No. 442,697).

The type-bars lie horizontally and are actuated by a double-link over-throw parallel motion, carrying the types from their position at rest against an inking pad, to a common printing point on the top centre line of the platen roller. The two groups of bars are arranged as sectors of a circle lying to the front and rear of the carriage. The earliest Williams models had a curved keyboard, but later models had the conventional rectangular keyboard with 28 keys giving 84 characters by double shift. Inv. 1915–290.

17. CRANDALL " NEW MODEL " TYPEWRITER, 1881–93 PLATE V

Subsequent to the agreement noted in the Introduction, Lucien Stephen Crandall proceeded with the development of machines of the Type-Sleeve class, under his U.S.A. patent of December 20th, 1881 (No. 251,338). The first design was put on the market in 1881. The model shown is the No. 3, or " New Model," which appeared in 1893 and represented a great advance on the earlier Crandall machines. This was followed by the " Improved Crandall " in 1895. The No. 3 was the best known of Crandall's designs.

The type-sleeve is mounted with its axis vertical, and carries six rows of characters, the sleeve being struck against the platen roller at the horizontal centre line, so providing partially visible writing, the last few characters being obscured by the sleeve.

The keys are arranged in two rows in sectors of a circle, the 28 keys providing 84 characters by double shift keys. The small spacing key is arranged in the centre of the outer ring of character keys. Inv. 1934–644.

12. BLICKENSDERFER TYPEWRITER, 1893. Presented by Miss Currey.

This is a small and light portable machine of the Type-Wheel class which, next to the Hammond, attained the greatest popularity amongst the type-wheel and type-sleeve classes. It was invented by G. C. Blickensderfer of Erie, Penn., U.S.A., in 1889, being put on the market in 1893. It was manufactured by the Blickensderfer Manufacturing Co., of Stamford, U.S.A. This is the first true " portable."

The wheel spindle is set obliquely upwards, and the wheel is of 1·4 in. diameter by 0·75 in. face. Depression of a key causes registration of the type-wheel followed by a strike down on to the platen. Early models had an " Ideal " keyboard, with double shift keys for capitals and figures, the most commonly used letters being arranged on the lowest row of keys. After 1910 it was also supplied with the " Universal " keyboard. The weight of the machine is 6·6 lb. The Blickensderfer, or " Blick," was reintroduced in 1928 by the Remington Co. Inv. 1937–571.

19. GARDNER TYPEWRITER, 1893

This typewriter, patented by Mr. J. Gardner in 1893, was an attempt to reduce the size and cost of such machines. It prints 84 symbols by 14 keys and two shift keys, each of which controls six cases, the left hand adjusting these while the right depresses the keys. As both hands are used in printing a single character, the manipulation of the machine is difficult. The types are arranged in six rows on a vertical rubber-faced cylinder, which is inked by two saturated inking rollers. The carriage is fed along by a rack driven by a pinion on the spring box, and on the rim of the box is fixed the escapement. Printing is performed by a small rubber-tipped hammer, at the back of the paper, which, on the depression of a key, forces the paper against the printing cylinder. An intervening mask prevents more than one character being printed at a time. The row of type which shall be opposite the printing hammer is determined by a change-case lever and a key at the front of the machine. The lever moves horizontally in contact with a pawl that fits against teeth upon it, and it determines three elevations of the type cylinder, while the vertically moving key engages with other teeth that fix three intermediate positions. When the row is thus settled, the correct rotation of the cylinder is performed by the type key, which partly rotates a horizontal shaft on which is a crown segment gearing with a long pinion on the type cylinder and then works the hammer. A locking lever is introduced which by fitting into the teeth of the long pinion secures precision in the angular position of the cylinder. Inv. 1911–12.

13. "VICTOR" TYPEWRITER, 1894. Presented by H. F. Sarney, Esq.

This machine, of the Type-Wheel class, but combined with a selector of the Circular Index class, was the subject of U.S.A. patents taken out in 1889 by Messrs. F. D. Taylor and F. A. White, of Hartford, Conn., and was manufactured in 1894 by the Tilton Machine Company, of Boston, Mass., U.S.A. The type-wheel is mounted with its axis horizontal and consists of a thin metal disc of spring steel, divided into narrow radial fingers each of which carries one character, there being 80 in all. The disc is mounted against a serrated wheel, provided with 80 slots, a plunger being driven into the selected slot by the action of a trigger mechanism, so pressing the selected character against the platen. Continuous inking is provided by two felt pads against which the types rub when revolved. The desired character is selected by a lever, operated by the right hand, moving over a semi-circular index extending over 180 degrees, the lever being attached to a bevel wheel, meshing with a bevel pinion attached to the disc, giving a 2 to 1 ratio whereby the disc revolves through a total of 360 degrees. The impressing plunger is driven forward by a cam and trigger and has a screwed adjustment for varying the weight of the blow. The trigger can be independently operated for impression without spacing, but is normally operated by a key, used by the left hand, which provides impression and spacing, a further spacing key adjacent providing word spacing. Inv. 1936–424

56. OLIVER TYPEWRITER, No. 1, 1894. PLATE VII

The Oliver typewriter, which is the only successful representative of the Down-Strike-From-Side class, was invented by the Rev. Thomas Oliver in 1888 and patented by him in U.S.A. in 1892, and in Great Britain in 1896. The Oliver Typewriter Company was founded in 1895. The various Oliver models appeared in the following order: No. 1 in 1894; No. 2, late 1894; No. 3, 1898; No. 5, 1907; No. 7, 1915; No. 9, 1916; and the standard Model II "Speedster" in 1922.

The type-bars consist of 28 ∩-shaped loops arranged in two nests to the right and left of the printing point, so providing complete visibility of the writing, the type striking on to the vertical centre line of the platen. Each loop bar carries three characters, printing 84 characters by double shift. The use of a curved bar, pivoted at its extremities, gives an exceptional virtual length of bearing, which is claimed to secure and preserve accurate alignment. The loops nest one within another and as the length of the levers varies, the shorter levers are provided with heavier type-heads with the object of equalising the impressions. The paper cylinder is fitted with three rollers, the pressure of which can be released for adjusting the paper. The register pawl can be lifted to free the roller when lining by pencil. Single or double spacing is actuated by a striking motion operated by the marginal stop.

Inv. 1936–31.

57. NORTH TYPEWRITER, 1895. Lent by North's Typewriter Manufacturing Co. Ltd.

The original "North" machine was introduced in 1892 by Lord North, who purchased the works of the "English" Typewriter Co. for its manufacture; the example shown is a later and improved form. The machine has 39 keys with single shift key, to print 78 characters. The bars stand vertically in an arc, and behind the carriage; long bearings for the joints are secured by arranging them at four different levels. The motion from a key is transmitted by a single lever to a vertical compression-rod connected to a short arm on the back of the type-bar. The carriage is constructed with open ends, so that any width of paper can be inserted, and as the roller is 9·6 in. long the machine can use "brief" paper without leaving excessive margins. The carriage frame is supported on balls, and the upper portion of the carriage, in the slight movement required for change of case, also travels on balls. The margins are determined by pegs that can be inserted in a perforated bar in the front, while an adjustable stop on the carriage provides means for regulating the striking of the signal bell. The feed is at the rate of 0·1 in., and is given by the usual double detent, attached to the carriage, which is propelled by a spring within a winding drum. The inking is done by a narrow ribbon; the bar leading the ribbon from the reels to the printing point is hinged, so that it can be lifted clear of the paper when required. The outer end of the ribbon lever is adjustable, so that the whole width of the ribbon can be utilised.

Inv. 1895–80.

55. "WAVERLEY" TYPEWRITER, 1895. Lent by the Waverley Typewriter Co.

This machine was constructed under the patents of Messrs. Higgins & Jenkins. It has 76 type-bars, each of which carries one character. The keyboard has only 38 keys, each actuating a lower-case or upper-case type-bar by selector mechanism and key. The inking is performed by a ribbon, which by a double fold returns parallel to itself. The fold of the ribbon is carried by a swinging arm, which lowers it on to the paper when the type-bar is descending; at all other times it is so far above the paper that the writing is visible. Spacing is by a rack escapement in the usual manner, but the teeth of this rack are of but one-half the usual pitch. Differential spacing is secured by allowing the carriage to move past a single tooth after printing a narrow letter, and past two teeth for a wider letter, while for the widest letters the feed is three teeth. This variation of the feed is attained by arranging that, for the wider letters, each key-lever lifts one or both of a pair of small bars which act as packing pieces and reduce the travel of the escapement when not lifted. In front of the keyboard is the usual space key, but it is so connected that this key and that of the final letter of a word can be simultaneously depressed, thus combining the spacing with the writing movement.

Inv. 1895–81.

43. SMITH PREMIER TYPEWRITER, No. 4, 1895. Lent by the Smith Premier Typewriter Co., Ltd.

The Smith Premier was first made in 1888 and introduced in 1889. It was the invention of A. T. Brown, and was put on the market by the well-known firm of gun manufacturers Lyman C. Smith & Co., of Syracuse, in 1890. It became the leading double-keyboard machine. This part-sectioned example of the No. 4 model is of 1895.

There is a double-keyboard of 84 keys, each of which actuates a longitudinal rocker shaft, which, by an adjustable rod, actuates its type-bar; each key has the same leverage and thus uniformity of touch is attained. The type-bars rock in steel cone bearings 1·625 in. apart on the type ring; this long bearing, which secures good alignment, is obtained with a small diameter of ring and a short type-bar, by setting the bearings tangential to the ring. Line spacing is of three widths and is automatically done in the act of drawing back the carriage for the next line; the latter runs on balls. The platen can be readily removed for the substitution of a harder one for manifolding work. The black-purple-red ribbon is directed between two spools in a Z-shaped course; by a transverse movement of the slide the required colour is brought under the printing point, or moved out of the way for stencil cutting. The types are cleaned by a circular brush below the type-bars; when rotated by a crank the brush rises on its screwed spindle into contact with the type.

A later model, No. 10, of the Front-Strike class, is shown in Group 4c.

Inv. 1908–5.

84. HARDY "STENOTYPER," 1895

This is a form of shorthand typewriter introduced in 1895 by Mr. J. F. Hardy. The method of abbreviation used is largely phonetic and nearly all vowels except initial ones are omitted. There are six characters used, of the dot and dash form shown, and by taking them singly and in combination an alphabet of 63 letters is made up which comprises the consonants and also many of the commonest combinations of consonants in a language. There is one key-lever to each character, made of sheet metal the full width of the platen; the rear edge of each is bent upwards at the printing line and has the character repeated 15 times along this edge. The six keys print in double line and can all be struck simultaneously without interference. In order that both hands may be used alternately and that the corresponding fingers in both hands may strike the same keys, three of the key-levers are made with duplicate keys. The highest key is for word spacing; it marks a dash, which is also used in combination, and is struck by the most convenient finger of the hand not in use. The type strikes against a platen, which is one of 15 blocks or anvils arranged in one complete helix round a cylinder. Thus only one character, or a combination of any of the six characters depending on the position of the platen, can make an impression at one time. The platen is fed forward automatically by a ratchet at each depression of a key. The paper is in the form of a continuous roll inserted on a spring core and is fed forwards by two rubber-covered rollers, the lower one of which is moved by ratchets each time a key is depressed; line spacing is therefore automatic. Inking is done by a carbon paper or ribbon the full width of the platen, wound backwards and forwards between two spools, the direction being determined by tightening and loosening thumb-screws. Inv. 1907–5.

The first practical machine of the Radial-Striking-Bar class was the—

24. FORD TYPEWRITER, *c.* 1896

In this design the type-bars are arranged to lie in the horizontal plane, converging to a common printing point on the horizontal centre line of the platen. The guides for the bars and the plate over the surface of which they slide are raised at the printing point to secure change of case. Inv. 1915–291.

Mr. W. P. Kidder was the inventor, in conjunction with the Hon. C. C. Colby, of the first "noiseless" typewriter, which was produced in 1910 under U.S.A. patent No. 567,241 of September, 1896. In its

developed form it is the foundation design on which the modern "noiseless" machines are based. The early machine is described under the period 1901–1910, the later version is described under the period 1921–30.

44. REMINGTON TYPEWRITER, No. 7, 1896. Presented by the Remington Typewriter Co., Ltd.

This is a development of the Model No. 5 (Inv. 1931–276). With its associated models, Nos. 8 and 9, it was the last of the Remington designs to have invisible writing. No. 8 was a wide-carriage version of the No. 7, whilst the No. 9 was similar to No. 7 but had 92 characters. It was manufactured for only a short period and supplied chiefly to the American market. The No. 7 has 84 characters actuated by 42 keys with single shift, and incorporated a new form of escapement which gave an improved touch and more accurate spacing. The margin stops are of improved design for rapid setting. The margin release key operates without requiring resetting of the stops. It also has a keyboard lock, to prevent depression of the keys when the end of the line is reached. It is claimed to have had the first satisfactory automatic ribbon reverse, invented in 1896 by G. B. Webb. The *Gorin decimal tabulator* appeared as an attachment to the Remington in 1898. Inv. 1935–23.

25. GRANVILLE "AUTOMATIC" TYPEWRITER, 1896

This machine was constructed by B. Granville, of Dayton, Ohio, U.S.A., and constituted an improvement of the earlier "Rapid," which had also been made by Granville in 1890. It has a rapid-striking, or "staccato" touch. The "Universal" keyboard is provided with 40 keys, printing 80 characters with a shift key. It did not achieve any marked success, and the reason for the name "Automatic" is not apparent. Inv. 1928–1346.

5A. "GLOBE" TYPEWRITER, 1896

This cheap machine, of the Swinging-Sector class, with Index Selector, was introduced in 1893 by The American Typewriter Co. of New York as the "American $5" machine, and was placed on the British market in 1895 by the Globe Investment Trust as the "Globe," selling at 45*s*. From 1899 the parent company manufactured the Armstrong, which was of the Up-Strike class (see Inv. 1928–1347), but was likewise known in U.S.A. as the "American."

A finger selector lever, operated by the right hand, moving over a semi-circular index, actuates a swinging sector which consists of a register strip, pierced with holes, and a moulded rubber strip carrying the 72 characters. Depression of the left hand key first causes a pin to enter the appropriate hole in the register and then, by a lever, presses the rubber character against the platen, a mask preventing adjacent characters from reaching the platen. Letter spacing takes place when this key is released. A separate key at the front provides independent and word spacing and also releases the carriage so long as it is depressed. Two inking rollers are mounted at the sides. A warning bell is provided but there are no margin stops or other controls.
Inv. 1937–81.

23. LAMBERT TYPEWRITER, 1896–98

This machine was patented by Mr. F. Lambert, of Brooklyn, New York, during the period 1896–98. It was manufactured in Europe by the German Gramophone Co., of Hanover, and by Sydney Hebert, of Dieppe, France. Eighty-four characters are arranged in three concentric staggered rows on a spherical surface connected by an arm and a clutch with a disc on which 28 buttons, each marked with three characters, are arranged in the same order. The disc can tilt in any direction, but cannot rotate. Attached to the ball by a spring is a cap which bears against the centre of the disc on which are radial corrugations corresponding in number to the buttons. When a button is depressed there is no force tending to rotate the disc, and as the corrugation gives two points of support it always tilts in one particular path. The tilt is determined by a pin engaging spaces in one of three stepped internal rings on the upper side of the type surface. The pin can be depressed by a cam and lever so as to engage any one of the three rings, so giving two changes of case. The ball, guide pin, and bracket are depressed to bring the selected type against the platen, the other type being

28 MAY 1940

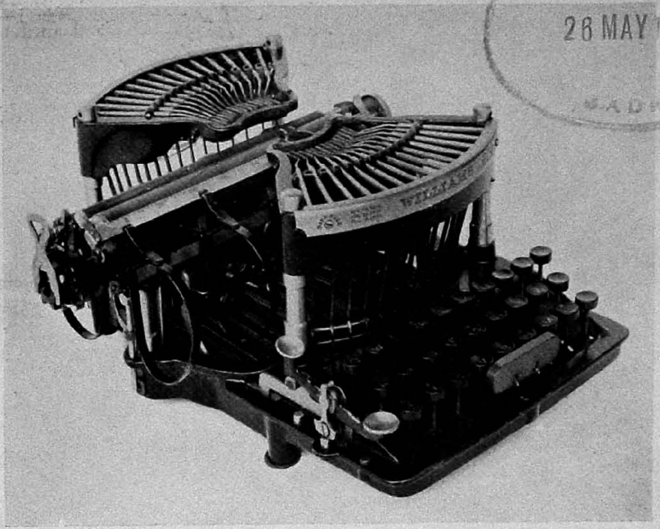

WILLIAMS TYPEWRITER, 1892–1894.
" The most popular of the ' Grasshopper ' Class."

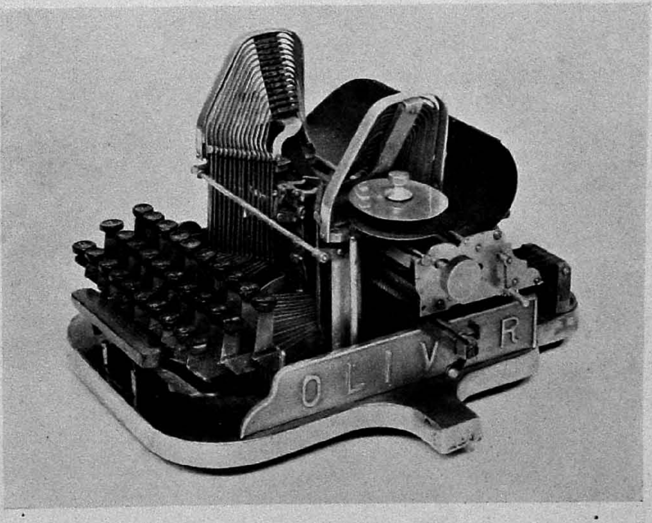

OLIVER No. 1, 1894.
" A successful representative of the Down-Strike-from-Side Class."

PLATE VIII

26 MAY 1940

UNDERWOOD No. 1, 1897.
"The first successful typewriter of the Front-Strike Class."

REMINGTON No. 10, 1907.
"Perhaps the most popular of all typewriters of the period. A Front-Strike Class machine."

shielded by a mask which has on its upper surface an inking pad in contact with the type. The disc with all its parts is hinged so that it can be turned back. The depression of the disc actuates the escapement which gives letter spacing. The carriage is free, being propelled by a coil spring. Line spacing is given by the usual ratchet feed. The machine with its case weighs 8·5 lb. Inv. 1907–8.

70. UNDERWOOD TYPEWRITER, No. 1, 1897. PLATE VIII. Lent by Underwood Elliott Fisher, Ltd.

The No. 1 Underwood was the pioneer design of the successful Front-Strike machines with fully visible writing. It was developed by Franz X. Wagner, under his U.S.A. patents of 1893 and 1896 (No. 559,345). Wagner had been responsible at an earlier date for the development of the Yöst Caligraph (Inv. 1930–105). Wagner's design was taken up by John T. Underwood and placed on the market in 1897, the Underwood Typewriter Company of New York being incorporated in 1895. The machine appeared on the British market in 1905, as the No. 5 Model of 1900. It is claimed that the No. 1 Underwood was the first machine to include a sub-lever movement for rapidly accelerating the type-bar, giving light touch operating by the momentum imparted to the bar. The type-bar operating linkages and levers provide what is known as a " legato " follow down, or organ touch, which requires that the finger key shall be fully depressed. A further factor in lightness of touch is the method of fixing the universal bar behind the type-bars, so arranged that its movement by a type-bar does not commence until the type has arrived nearly at the printing point, its resistance to motion being overcome by the momentum of the accelerated type-bar. In previous designs the universal bar was in close contact with the type-bars, the key-lever having to overcome the inertia of both. It was also the first machine to be fitted with a tabulator as an integral part of the machine. The tabulator key is at the right-hand upper corner of the keyboard. Stops on a rack at the rear are engaged one after another by depression of the key, which at the same time moves a flat bar into contact with a leather pad on the carriage, varying pressure on the key controlling the friction so introduced, preventing rapid travel and shock to the carriage. The machine is fitted with two shift keys, but has no shift lock. Inv. 1936–11.

60. MASKELYNE " VICTORIA " TYPEWRITER, 1897. Presented by the South Western Polytechnic

This machine represents a more successful version of the Maskelyne design of 1889, shown nearby (see Inv. 1913–683). Differential spacing of the characters is retained, but the action of the type-bars has been modified. The inking pad faces downwards and the action of the key mechanism first lowers the type-bar from the pad, then moves it forward until clear, followed by an upward movement and a final downward movement to make contact with the platen roller surface. It is stated that with well cleaned type and operated at moderate speed, this machine did exceptional work which was almost a facsimile of printing, but the mechanism was too delicate to withstand rough usage. Inv. 1921–69.

14. EDELMANN TYPEWRITER, 1898

The Edelmann combines the use of a single lever index movement with type-wheel impression in an attempt to get over the disadvantages of the single lever system ; of slowness, non-visibility, and poor duplicating power. It was originally

made by Wernicke, Edelmann & Co., of Berlin, later reconstructed as the Edelmann Typewriter Co., and was subsequently handled by Julius Pintsch & Co., of Frankfurt-am-Main. The German patent number is D.R.P. 101,672. The single key-lever swings over a sector index provided with a number of vertical slots corresponding to the number of characters, and into which the lever is depressed to make the desired impression. The swing of this lever causes the type-wheel to be revolved by a rack sector, depression of the lever causing the wheel to strike down on to the platen. At rest the wheel spindle is set obliquely upwards, with the face of the wheel comparatively far from the paper. Three shift keys are provided, giving capitals, lower case, and figures respectively. The sleeve is of approximately 1·4 in. diam. by 0·75 in. face, and has three rows of characters. Inv. 1929–896.

71. " PITTSBURG " TYPEWRITER, 1898

The Pittsburg is a descendant of the earlier " Daugherty " of 1896, the subject of U.S.A. patent No. 553,153, with the incorporation of detail improvements. The keyboard, key-levers, type-basket, and platen roller carriage are all quickly detachable, change of case being obtained by shifting the whole type-basket. The key-levers are loosely attached to the type-bars by an open-jawed end, giving " staccato " touch, each type-bar having a spring return, and striking into a Vee guide before making contact with the platen. The margin release is fitted at the back of the carriage slide.

The Model 10 appeared in 1905, similar to the preceding models but more strongly built. The Model 11 had a different exterior. It was later known as the " Reliance " typewriter. Inv. 1915–292.

6. " KEYSTONE " TYPEWRITER, 1899

The " Keystone " was introduced in 1889 to meet the demand for a simple and inexpensive machine, and was manufactured by the Keystone Typewriter Co., Newport and Harrisburg, U.S.A. It was also sold in Germany under the name of the " Grundstein." The whole design is moulded on cheapness of production and is said to comprise only 156 parts. The " Universal " keyboard is furnished with 28 keys, giving 84 characters by double shift. The method of mounting the paper and the ribbon movement are similar to Hammond practice. Inv. 1927–916.

45. " NEW CENTURY CALIGRAPH " TYPEWRITER, No. 6 1900

This shows a later version of the original Yöst Caligraph (Inv. 1930–105) as developed by the American Writing Machine Co., of New York. A double-keyboard of 84 keys is provided, the lower-case keys being arranged nearest to the operator. The key-levers are connected to the type-bars through parallel horizontal levers for the purpose of ensuring uniform depression and touch over the whole keyboard. The platen carriage runs on steel balls at the rear and a single roller in front. To prevent loss of alignment due to the increase in the effective diameter of the platen when manifolding, the path of the front carriage roller is provided with an elevating arrangement. The ribbon is fed and traversed to utilise the whole of its surface. Margin stops, warning bell, and keyboard lock are provided. Inv. 1934–468.

Although, as noted, the Semi-Front-Strike system was introduced by Horton in 1883, the first successful example of this class was the—

61. " IDEAL " TYPEWRITER, 1900. PLATE IX.

The " Ideal " design was patented by Messrs. Barney & Tanner, of Groton, New York, but actual manufacture was undertaken by Messrs. Seidel & Naumann, of Dresden, in 1897. It was the second machine which secured a popular market in Germany. The type-basket is set back at 45 degrees. The " Universal " keyboard is provided with 42 keys giving 84 characters by single shift, two shift keys and a shift lock being provided. The type-bars are of light pressed channel section, giving considerable strength, and are fitted with rebound springs. The " Ideal " was the first German machine to have a back-spacer. Model No. 1 had a single colour ribbon, No. 4 having a two-colour ribbon with lateral movement at the strike to uncover the writing.

Inv. 1930–107.

46. ARMSTRONG TYPEWRITER, No. 8, 1902

The Armstrong as introduced on the English market is identical with the "American" of the American Typewriter Co. The design is not of an advanced type, the key-levers and type-bars being made in one piece, striking directly up against the underside of the platen. The "Universal" keyboard is provided with 27 keys giving 81 characters by two shift keys. Inv. 1928–1347.

20. MOYA VISIBLE TYPEWRITER, No. 2, 1903

The Moya was of English make, invented by Señor Moya, a Spanish-American, and J. G. Chattawey, of Leicester. In the earliest model the characters were formed on a tube of moulded elastic material which was mounted on the metal type-sleeve cylinder. Impression was made by a lever inside the sleeve, passing through apertures in the cylinder and pressing out the selected flexible character from the inside against the platen. The model of 1903, here exhibited, reverted to a solid type-sleeve mounted with its axis vertical as before, but now struck against the platen in the normal manner. The writing is visible except for the last three or four characters, which are hidden by the sleeve. The keyboard carried three rows of 28 keys in all, giving 84 characters by double shift keys set at the left-hand side of the keyboard. The third model, of 1906, which had six rows of keys with 14 keys per row, giving 84 characters as before, was the best known of the Moya range. Inv. 1928–1349.

34. "MIGNON" TYPEWRITER, 1904

This machine was made by the A.E.G. Co., Berlin. It embodies the use of the type-sleeve, which is struck down to the platen to make the impression. To the left-hand side is mounted a square index, over which is moved a pointer which is connected with the selector mechanism actuating the type-sleeve, providing it with a rotary and longitudinal motion to bring the corresponding character into register. The impression is made by depressing one of two keys at the front of the machine. the alternative key being provided for word spacing. The machine was claimed to be rapid in use, and that an experienced operator could attain a speed of 250 to 300 characters per minute. The machine retained its popularity for a considerable period. Inv. 1924–30.

47. YÖST TYPEWRITER, No. 10, 1905

The Yöst No. 10, in comparison with the earlier Model No. 1, was designed specially for the European market, and was manufactured by the Yöst Typewriter Co., of Bridgeport, Conn., U.S.A. The key pads are larger and the keys lighter, and its duplicating power, deficient in earlier models, due to the friction of the type-guide, is here improved. The double-keyboard provided has 85 keys. Various widths of platen and carriage were provided forming Models 11 to 14. Inv. 1928–592.

15. "JUNIOR" TYPEWRITER, 1907

The Junior is a small and light machine introduced by Mr. C. A. Bennett, of Dover, U.S.A. The characters are arranged in three rows round the type-wheel. From 1910 the machine was known as the "Bennett," an example of which is shown adjacent, opened up to expose the mechanism. These machines are of interest since they embody all essential movements in the small space occupied. The weight of the "Junior" is only 4 lb. bare, and 5·25 lb. with case. Inv. 1935–82.

72. REMINGTON TYPEWRITER, No. 10, 1907. PLATE VIII.
Presented by the Remington Typewriter Co., Ltd.

The Model 10, which is of particularly robust construction, was the first of the Remington series of models to have visible writing. It was designed under O. Woodward's U.S.A. patent No. 863,890. Besides the features common to the earlier models, the No. 10 is fitted with a back-spacing key, and also introduced a decimal tabulator, or column selector, operated by five keys situated at the top of the keyboard, and

provided with stops which may be set on a rack at the rear. Any of the five columns or spacings so set may be independently selected by depression of the appropriate tabulator key. The type-bars are of massive construction, each being mounted in individual bearings in common with the earlier models. This mounting renders unnecessary the use of a type-guide to preserve the alignment. Inv. 1935–24.

73. SMITH PREMIER TYPEWRITER, No. 10, 1908

The Smith Premier No. 10 shows a later development as a Front-Strike machine of the earlier models, which were of the Up-Strike class (see the Model 4, in Group 4a). It was built by the Smith Premier Typewriter Co., of Syracuse, New York. The Model No. 8 appeared in 1904, based on C. Gabrielson's patent (U.S.A. patent No. 753,972) and known as the "L. C. Smith & Bros." This, together with the No. 9 of 1906, retained the double-keyboard principle. The No. 10 is similar in appearance to the original model and also keeps the double-keyboard of 84 keys. The type-bars are still arranged in two rows in a semi-circular type-basket, requiring short and long bars. The shorter type-bars carry the lower-case letters and most commonly used figures, etc., the longer bars carrying the capitals and remainder of the figures, signs, etc. A camming action in the type-bar movement gives a "semi-staccato" touch. The ribbon spools are mounted side by side on spindles at the rear of the machine, the ribbon remaining concealed except the portion immediately in use. A two-colour ribbon and a four-key tabulator are provided. The Smith Premier appears to be the only design to include a double keyboard with normal front-strike type-basket.
Inv. 1928–311.

25A. "NOISELESS" TYPEWRITER, 1910. Presented by Taylor's Typewriter Co., Ltd.

This is the first design of the "noiseless" group and is of the Radial-Striking-Bar class. As already noted, it was evolved by Mr. W. P. Kidder in association with the Hon. C. C. Colby, between 1894 and 1910 when a few machines were manufactured, but the first attempts to market the "Noiseless" were not successful and those made were partly withdrawn. The sliding type-bars are actuated by a toggle link which advances the type face to within a short distance from the platen, the actual pressure contact being made by a lever and roller working in a sector cam slot; this action was heavy and slow. During the research period which followed Mr. Nils H. Anderson, a member of the firm, devised a new motion incorporating a double toggle and weight, which acted as a momentum accumulator, and, by its over-throw action, after the toggles had reached their full movement, caused the pressure contact. The new movement was very successful and a new series of machines was introduced in 1915. Anderson's movement, showing the changes made from the 1910 cam action here shown, may be studied in the "Noiseless Portable" of 1921. (See Inv. 1928–1350) in Group 4c, whilst its modern development is shown in the Remington and Underwood Noiseless Standard machines exhibited in this Group. Inv. 1937–318.

16. BENNETT TYPEWRITER, 1910

The mechanism of the Bennett typewriter is almost identical with that of its predecessor, the "Junior," exhibited adjacent, except that an inking ribbon is now used instead of inking rollers. The depression of a key causes a lever to move forward and to engage with one of two notched racks. Further depression of the key causes rotation of the type-wheel by an ingenious arrangement of levers. The desired character on the type-wheel is selected by a toothed rack which rotates sideways by

the rotation of the type-wheel until it comes into contact with the key-lever, which acts as a stop. Still further depression of the key causes the type-wheel, with its associated mechanism, to strike on to the platen. The example is opened up to show the interior and mechanism. Two shift keys and automatic line spacing are incorporated, and it was claimed that a speed of 80 words per minute could be attained. The weight bare is 4·2 lb. Inv. 1935–81.

85. "STENOWRITER," 1910. Presented by E. P. Richardson, Esq.

This machine, the invention of M. Marc Grandjean, of Paris, is a shorthand typewriter. It was first patented in France in 1910. The system of abbreviation is largely phonetic, but the resulting record has the advantage over script shorthand that it can be read by any person with very little practice. It is claimed that speeds of 150 to 200 words per minute can be attained by the average operator in a much shorter period than is required to attain proficiency in ordinary shorthand.

The keyboard comprises 21 marked keys. Any of the keys may be struck individually, or several may be struck simultaneously, each stroke writing a syllable or a word on the roll of paper. Any individual key always strikes at the same position in the line, and thus the spacing of letters of various syllables is not uniform. The striking of a single letter, or of several letters simultaneously, causes the paper record to move upwards into position for the printing of the next syllable. The paper is wound automatically on to the spool at the top of the machine and in order to transfer the printed notes to a reading stand, the strip is torn above the strike roller and the tube slid to the right. The lever showing in a slot to right hand is for changing the direction of travel of the ribbon. It is claimed that the machine shown has had seventeen years' service, from about 1918. Inv. 1936–437.

Period 1911–20

62. BAR-LOCK TYPEWRITER, No. 15, 1911–13

This shows a later form of the Bar-Lock as manufactured by the Columbia Typewriter Manufacturing Co., of Newport, U.S.A. The Model 12 which appeared in 1907 had a smaller keyboard and did not prove popular. The Model 14 was introduced in 1910, followed by the Model 15 here shown, and the Model 16 in 1921.

The double-keyboard has 84 keys arranged with the capitals above, lower-case letters below, and signs and figures about the two sides. The chief market for the Bar-Lock was in Great Britain, leading eventually to Mr. W. J. Richardson, the London agent, securing the sole manufacturing rights in 1914, whilst the original Columbia factory concentrated on the production of a Front-Strike class machine called the "Visigraph." The earlier Model 7 is shown in Group 4b.

Inv. 1930–104.

51. "CORRESPONDENT" TYPEWRITER, No. 4, *c.* 1912

This is a small and compact machine. It is provided with the "Universal" keyboard, double shift key, and shift lock. Change of case is effected by moving the whole type-basket in contradistinction to the usual practice of shifting the platen carriage, this method permitting of a solid bed for the guides on which the carriage travels. Inv. 1930–106.

63. SALTER "VISIBLE STANDARD" TYPEWRITER, 1913

The Salter typewriter was first introduced in 1892 by Messrs. Geo. Salter & Co., of West Bromwich. The model exhibited, patented in 1911 (No. 17,324), constitutes a departure from the earlier ones, which were of the Down-Strike-From-Front class. The model shown is of the Semi-Front-Strike class with the type-bars set back at 45 degrees. The type-bars are struck into a Vee guide and are so formed, as to prevent clashing. The "Universal" keyboard is furnished with 42 keys giving 84 characters by single shift, with shift lock, change of case being effected by moving the whole type-basket and not by shifting the platen carriage. The two-colour ribbon has automatic feed and reverse. Inv. 1928–1348.

35. "VIROTYP" TYPEWRITER, 1914

This is a very small machine made in Paris by the Virotyp Co. to the design of Monsieur H. Viry, of Rambervillers. It was intended for use during military operations and could be easily carried in the pocket, or strapped to the left forearm for use in the trenches. The writing is visible and two carbon copies can be provided.

Inv. 1928–1351.

52. IMPERIAL TYPEWRITER, MODEL B, 1915. Presented by the Imperial Typewriter Co., Ltd.

This design of the Down-Strike-From-Front class shows a stage in the development of the modern Imperial typewriters (see Invs. 1934–647 (Portable) and 1934–645 (No. 50)). In this design the type-bars strike down into a type-guide, and on to the vertical centre line of the platen, giving visible writing, though somewhat obscured by the type-bar frame standing between the operator and the platen. The keyboard of 42 keys gives 84 characters by shift key, the keyboard being arranged as a sector of a circle. All the usual controls and movements are incorporated.

Inv. 1935–190.

53. IMPERIAL STANDARD TYPEWRITER, MODEL D, 1919. Presented by the Imperial Typewriter Co., Ltd.

This is a later form of the Model B shown adjacent (Inv. 1935–190), and is generally similar in design. It is likewise of the Down-Strike-From-Front class. The "Universal" keyboard is now adopted, and gives 96 characters by double shift, from 32 keys.

Inv. 1935–191.

74. "NATIONAL" PORTABLE TYPEWRITER, No. 5, 1916–20

This small and compact machine was one of the first of the modern designs to appear in portable form, in 1916. It was also known as the "Portex." It was manufactured by the National Typewriter Co., Fond du Lac, Wisconsin, U.S.A. The No. 5 appeared in 1920. The casing is made up of sheet metal pressings screwed together, a light form of construction. The keyboard has 28 keys printing 84 characters by double shift. The platen is of the full standard length and, due to the compact nature of the design, it overhangs the body at both ends. All the usual controls and movements are provided.

Inv. 1934–467.

The *Remington Portable* typewriter appeared in 1920 and is claimed to have been the first portable design to incorporate the standard four-bank keyboard with single shift.

Period 1921–30

The later development of the original "noiseless" typewriter forms, as already noted, the basis of the modern "noiseless" designs of Remington and Underwood. The method of making the pressure contact in the various examples exhibited will repay close examination, a typical movement being shown dissected and operable. Although the "thump" of the type-bar when making pressure contact with the platen is audible, this is far less insistent and objectionable than the loud "click" of the orthodox type-bar machines.

75. "NOISELESS" PORTABLE TYPEWRITER, 1915–21

This machine with its very interesting strike gear is a later version of the original "Noiseless," which was of the Radial-Striking-Bar type, patented by W. P. Kidder in 1896 (U.S.A. patent No. 567,241). It was manufactured by the Noiseless Typewriter Co., of Middletown, Conn., U.S.A., and introduced in 1915. The type operating mechanism is in principle the same as the original. Depression of a key-lever causes the type-bar to be moved forward towards the platen, bringing the operating links into full extension and in a straight line, but the type is still about 0·15 in.

away from the paper. Incorporated in the linkage is an over-throw weight, the fulcrum and short end being connected to the overlapping adjacent ends of two links, the longer free end forming a weight which accumulates momentum and over-throws, and, by virtue of its leverage, moves the type-bar forward into " pressure " contact, as distinct from striking contact, with the platen. For this reason total depression of the key is not necessary, and a lighter finger strike is more suitable. The elimination of the " click " was disconcerting to users, tending to make them strike harder instead of more lightly.

The "Universal " keyboard is provided with 28 keys and two shift keys and locks, duplicated and mounted on each side of the keyboard, thus controlling 84 characters. The margin release and back-spacer are at the right-hand side. The platen roller is of metal, not rubber faced. The machine with its case weighs 7·7 lb. In 1924 the Noiseless Typewriter Co. was consolidated with the Remington Co.

Inv. 1928–1350.

7. HAMMOND FOLDING PORTABLE TYPEWRITER, 1923. Lent by the Hammond Typewriter Co., Ltd.

This example shows the modern development of the Hammond from the original design (see Hammond " Ideal " Typewriter, Inv. 1931–281). A thin and light metal sector carries the type characters, and is mounted with its axis vertical in a stationary circular shuttle. The type-sectors are rapidly changed so that any type face can be mounted in the machine, making it exceptionally useful for scientific and literary work where, for example, a Greek quotation or a mathematical equation has to be inserted. The depression of a key-lever causes the type-sector to rotate until the desired character is in registration, when a small hammer at the back is released and strikes the paper against the type. The force of the hammer blow is adjustable to suit varying conditions, such as the taking off of several carbon copies, and when adjusted the blow is invariable and independent of the operator's touch. The machine weighs 8·5 lb. Inv. 1923–1489.

26. "EMPIRE" TYPEWRITER, MODEL 2, 1923. Lent by the Empire Typewriter Co., Ltd.

This machine is of Canadian manufacture. The model shown writes 90 characters. The type-bars are arranged in a single horizontal plane and converge to a common printing point. There are three types on the end of each bar, with double shift. Inv. 1923–1488.

We now reach the period when general standardisation of design took place, all the leading and successful makes being equipped with the standard number of controls, the chief difference in the typewriters of to-day being the position selected for the " touch " of the various key systems, ranging from true " staccato " to true " legato " or organ touch. Every grade has its adherents, according to the temperament of the user. The period under review closes with a series of these designs, which include in the Collection the following :

76. " ORGA " TYPEWRITER, 1923. Lent by Messrs. ORGA, Ltd.

This machine is of German manufacture. The model shown writes 88 characters. The body of the machine is pressed out of steel plate. The use of riders for column-setting is dispensed with, a movable scale at the side of the machine being used for this purpose. Inv. 1923–1494.

77. YÖST TYPEWRITER, No. 20, 1923. Lent by the Yöst Typewriter Co., Ltd.

This is one of the later models of the Yöst typewriter, earlier versions, Nos. 1 and 10, being shown in Group 4a.

The model retains the principle of direct inking from a pad as opposed to the usual method of printing through a tape. Inv. 1923–1487.

64. "CORONA FOUR" TYPEWRITER, 1924. Lent by the Corona Typewriter Co., Ltd.

This is a portable typewriter designed for compactness and unusual lightness.
Inv. 1924–718.

79. BAR-LOCK PORTABLE TYPEWRITER, 1929. Lent by the Bar-Lock (1925) Co., Ltd., Nottingham

This is a small and compact version of the No. 18 shown adjacent, but arranged as a portable. The weight complete with travelling case is 10 lb. It has an 8·5-in. line, three-bank keyboard, shift and lock, back-spacer, margin release, etc.
Inv. 1931–538.

80. BAR-LOCK TYPEWRITER, No. 18, 1925–28. Lent by the Bar-Lock (1925) Co., Ltd., Nottingham

The Model 18 shows the modern development of the earlier models illustrated by the No. 7 and No. 15 (see Group 4b). The Model 16 appeared in 1921. The platen and carriage are instantly detachable and replaceable by others of differing lengths. All the usual controls are provided, and the machine is housed in a pressed casing enclosing all possible parts against dust. Inv. 1931–537.

Period 1931 Onwards

Of the designs which have been placed on the market since 1931 the selection exhibited forms a representative collection; arranged to illustrate the generality of the successful makes, and comprises the following :

65. REMINGTON NOISELESS PORTABLE TYPEWRITER, 1931. Lent by the Remington Typewriter Co., Ltd.

The Remington Noiseless Portable of 1931 was introduced on the British market at the end of 1932. The action is exceptionally silent and makes use of a toggle action combined with the use of an under-throw weight.

Depression of a key-lever moves the corresponding type-bar forward to a position close to but not touching the platen by the action of the toggle bars which, at the full extent of the primary forward motion, are still at an obtuse angle to each other. The action of the key-lever also moves forward and accelerates a weight, which is suspended so as to have an under-throw action. At the termination of the movement imparted by the key-lever, the weight continues in forward motion, straightening out the toggle bars and so bringing the type-bar into pressure contact with the platen. All the usual controls and movements provided in modern machines are incorporated.
Inv. 1937–77.

66. UNDERWOOD NOISELESS PORTABLE TYPEWRITER, 1931. PLATE IX. Lent by Underwood Elliott Fisher, Ltd.

This machine was introduced on the British market in 1931. The silent action is secured by the use of a toggle action combined with an under-throw weight.

Depression of a key-lever moves the corresponding type-bar forward to within about 0·2 in. from the platen by the action of the toggle bars, which at the full extent of the primary forward movement are still at an obtuse angle to each other. The action of the key-lever also moves forward and accelerates a weight, which is suspended so as to have an under-throw action. At the termination of the movement caused by the key-lever, the weight continues in forward motion, straightening out the toggle levers and so bringing the type-bar into pressure contact with the platen. The action reduces the loud click of the non-silent machines to a slight dull thud as the pressure contact is made. All the usual movements provided in modern machines are incorporated.
Inv. 1934–661.

28 MAY 1940

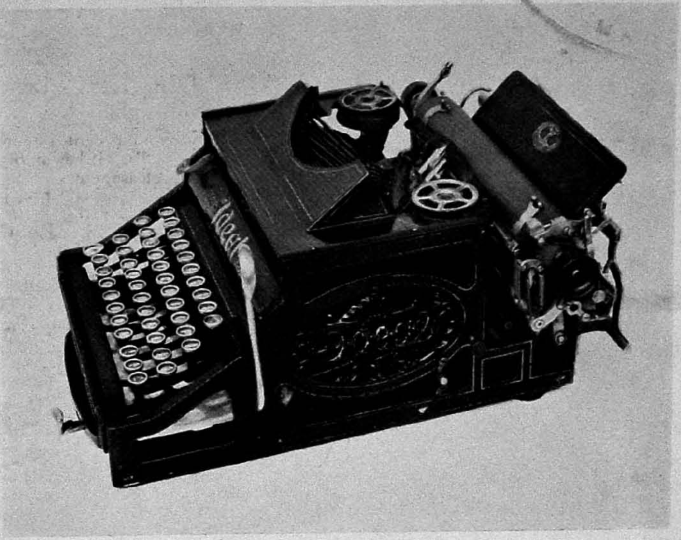

"IDEAL" TYPEWRITER, 1900.

"An early example of the Semi-Front-Strike Class, a movement used frequently in modern portable typewriters."

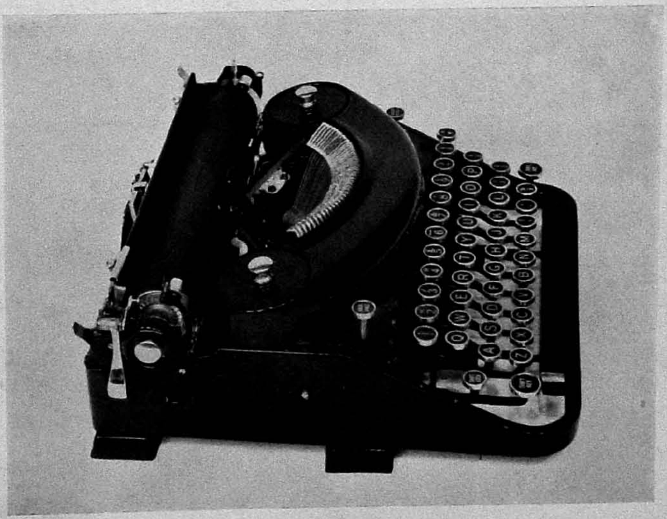

[By permission of Underwood Elliott Fisher, Ltd.

UNDERWOOD NOISELESS PORTABLE, 1931.

"A Semi-Front-Strike Class machine incorporating the 'momentum accumulator' to make pressure-contact impression."

PLATE X

26 MAY [illegible]

[By permission of the Remington Typewriter Co., Ltd.

REMINGTON NOISELESS STANDARD, 1934.

" *Showing modern development of the Radial-Striking-Bar Class typewriter, incorporating a ' momentum accumulator ' to make ' pressure-contact ' impression.*"

[By permission of International Time Recording Co., Ltd.

INTERNATIONAL ELECTRIC, 1936.

" *Illustrating the modern application of electric drive to all movements and controls ; giving great rapidity with light keyboard touch.*"

67. IMPERIAL PORTABLE TYPEWRITER, 1932. Lent by the Imperial Typewriter Co., Ltd.

The Imperial portable model, known as the "Good Companion," is equipped with the full four-row "Universal" keyboard giving 88 characters. The type-bars lie back, giving full visibility of the writing, and each bar has a heel to prevent damage to the characters through clashing.

The machine is provided with the usual functions of a Standard model, including ball bearing carriage movement with central locking lever for transit; folding line-space lever and carriage shift operating in the horizontal plane; quadrant gears between sub-levers and type-bars giving positive action; pressed steel frame; auxiliary paper feed; two-colour and stencil lever, and standard full-length ribbon movement actuated by key-levers only; back-spacer and stop. Dimensions of case: width, 12 in.; back to front, 12·5 in.; depth, 5 in. Weight, with case, 13·5 lb.
Inv. 1934–647.

81. IMPERIAL STANDARD TYPEWRITER, MODEL 50, 1932. Lent by the Imperial Typewriter Co., Ltd.

The Imperial typewriter in its present form was placed on the market in 1926. The machine shown is the Model 50, which incorporates many detail improvements. The machine is built on the unit assembly principle, whereby, without necessitating the use of tools, carriages of varying length, platens of varying hardness, and change of the whole type section can be effected.

The four-row keyboard prints 90 characters, and the ribbon feed is so geared that movement is effected only by the depression of the type-bars and not by the space-bar, carriage release, or tabulator movements. Provision is made for the usual functions, such as two-colour and stencil cutting; margin lock and release; paper release; platen release; interlining platen-plunger; carriage release operated by either hand; tabulator, etc. The standard half-inch ribbon is used, with automatic ribbon motion reverse. A spare carriage is exhibited. Inv. 1934–645 and 646.

68. REMINGTON RAND PORTABLE TYPEWRITER. MODEL 1, 1933. Lent by Remington Rand Inc.

As noted, the Remington Portable of 1920 was the first portable to have a full four-bank keyboard and change of case by single shift. This was followed by No. 3 in 1928. The machine exhibited is a successor to the Remington series and is the first machine to be marketed under the new name of Remington Rand following upon amalgamation and the new style of the firm as Remington Rand Incorporated.
Inv. 1937–78.

82. ROYAL STANDARD TYPEWRITER, MODEL H, 1934. Lent by the Visible Writing Machine Co., Ltd.

This model represents the current standard design of the Royal typewriter, but has a platen to take foolscap size paper. All the standard modern controls are fitted, together with the "Universal" keyboard.

In addition, the following controls are provided: touch control, to adapt the touch instantly to individual requirements; paper lock, opened by the withdrawal of the paper, the next insert being made without adjustment; the paper table tilts forward to facilitate setting of the tabulator stops; five decimal tabulator keys and separate correspondence tabulator key; change of case by shifting the basket carrying the type-bars, the carriage running on a solid bed—this permits easy interchange of carriages for various widths. The keys are fitted with non-glaring white on black lettering and have no raised rim. The mechanism is completely enclosed in dust-excluding metal and glass cover plates, the exposed portions being protected by dust sheds.
Inv. 1934–687.

27. REMINGTON NOISELESS STANDARD TYPEWRITER, 1934. PLATE X. Lent by the Remington Typewriter Co., Ltd.

This design was introduced into Great Britain in 1934, following upon the consolidation of the Noiseless Typewriter Company with the Remington Company in 1924. The mechanism is a very interesting reversion to the Radial-Striking-Bar type which, from about 1923, fell into disfavour due to the difficulty of obtaining a clean impression from type striking on to the platen at a considerable angle from the normal. This trouble has been entirely eliminated in modern examples of the mechanism. The sliding-bar mechanism is similar in general principle to that of the "Noiseless Portable" of 1921 (Inv. 1928–1350), the over-throw of an accelerated weight causing the final advance of the type face and its pressure, not strike, contact with the platen.

In the modern form each type-bar is utilised to make capitals and lower-case impressions for two distinct letters or characters, each bar being actuated by two keys. Depression of one key causes the bar to move forwards and slightly downwards, bringing the characters uppermost on the bar end into register, whilst the alternative key causes the bar to move forwards and slightly upwards, bringing the lower characters into correct register, a secondary linkage movement being incorporated to control the selective positioning of the type-bar. In each case, at the end of the movement caused by the depression of the key, the energy stored in the over-throw weight comes into operation and causes the final travel of the bar. The almost silent pressure-contact obtained is substantially independent of the strength of the finger strike, which should be light. It is now manufactured in Canada. Inv. 1937–79.

28 and 28A. UNDERWOOD NOISELESS STANDARD TYPE-WRITER, 1934. Lent by Underwood Elliott Fisher, Ltd.

In this design the mechanism used is similar in general principle to that of the "Noiseless Portable" of 1921 (Inv. 1918–1350), the over-throw of an accelerated weight causing the final advance of the type-bar into pressure contact with the platen.

In the modern form of this design each type-bar is utilised to make impressions for two distinct letters, each bar being actuated by two keys. Depression of one key causes the bar to move forwards and downwards, bringing the characters uppermost on the bar end into register, whilst the alternative key causes the bar to move forwards and upwards, bringing the lower characters into correct register. This selective positioning of the type-bar is controlled by a secondary linkage mechanism.

An operable example of the bar and dual key mechanism is exhibited nearby. See 28A (Inv. 1936–26) Inv. 1934–660.

83. UNDERWOOD STANDARD TYPEWRITER, 1934. Lent by Underwood Elliott Fisher, Ltd.

This model represents the makers' current practice in design. It is interesting to compare it with the original No. 1 Underwood of 1897 (Inv. 1935–9), from which design there is but little change, apart from the addition from time to time of new control features.

The machine has the standard four-bank keyboard with 42 keys printing 84 characters by single shift. Two shift keys and a shift-lock margin release, for both right and left-hand margins, and marginal stops are provided. The machine also has a four-key decimal tabulator and separate correspondence tabulator key, two-colour ribbon and stencil lock. All the standard controls are fitted.

Inv. 1934–659.

69. " INTERNATIONAL " ELECTRIC TYPEWRITER, 1935. PLATE X. Lent by the International Time Recording Co., Ltd.

This typewriter is operated electrically, and very high speeds may be reached with relatively little fatigue. The makers claim that in the electrically operated type the mechanical effort is only 2 oz. through ⅛ in., only a fraction of that required on the average manual machine. The heavier operations, such as carriage return, shift for capitals, back-spacing, etc. require no more manual effort than the type keys. The flat keyboard also contributes to the ease of typing at high speeds. The pressure exerted on the keys makes no difference to that communicated to the working movements so that very even impressions are always obtained.

An electric motor imparts constant motion to a friction roller which in turn drives the operating mechanism of the type-bars, which comprises a double-faced friction cam held just clear of the roller on to which it is brought into contact when released by a slight pressure on a key. When one of these cams touches the roller it receives a kick due to the friction between the cam and the revolving roller. This force operates the type-bar and other movements. The cam turns through half a revolution, bringing into position a portion which is formed as a radius a little greater than that of the roller, which permits the type-bar to return to the " set " position. The manual force required is only that necessary to release a stop pin retaining the cam in the " set " position. For taking carbon copies the speed of the friction roller may be increased by adjusting an indicator at the right-hand rear portion of the machine, a higher speed increasing the force applied to the mechanism. The indicator caters for copies up to 25 at a time, but for such a number thin paper and a specially hard platen are normally required. Specimens of the first and twenty-fifth copies so obtained are exhibited nearby. The evenness of the impressions permits the cutting of perfect stencils, without special skill. The carriage return mechanism automatically adjusts the line spacing, for which a control from one to three lines space is provided. The type-bar movement is so designed that clashing of adjacent bars is not met with at the highest speeds normally obtained. Inv. 1935–635.

LIST OF DONORS AND CONTRIBUTORS

Bar-Lock (1925) Co., Ltd., The.
Bedford, Major W. G. A.
Brassey, Lady.
Corona Typewriter Co., Ltd., The.
Currey, Miss
Empire Typewriter Co., Ltd.
English Typewriter Co., The.
Fitch Typewriter Co., The.
France, Captain W. H.
Gardner, J., Esq.
Hammond Typewriter Co., Ltd., The.
Hood, James, Esq.
Imperial Typewriter Co., Ltd., The.
International Time Recording Co., Ltd., The.
Jensen, P., Esq.
Morton, A. E., Esq.
North's Typewriter Manufacturing Co., Ltd.
ORGA, Ltd.
Palmer, C. A., Esq.
Remington Typewriter Co., Ltd., The.
Richardson, E. P., Esq.
Royal Engineers Institute, The, Chatham.
Sarney, H. F., Esq.
Sculthorp, E. C., Esq.
Smith Premier Typewriter Co., Ltd., The.
South Western Polytechnic, The.
Sturdy, Philip, Esq.
Taylor's Typewriter Co., Ltd.
Thompson, W. H., Esq.
Underwood Elliott Fisher, Ltd.
Visible Writing Machine Co., Ltd., The.
Waverley Typewriter Co., The.
Wheatstone, Sir Charles.
Wild, Mrs. M. R.
Winser, E., Esq.
Woodward, W. A., Esq.
Wortley, Colonel Stuart.
Yöst Typewriter Co., Ltd., The.

N.B.—A portion of the Collection of typewriters belonging to Lieut.-Commander R. T. Gould, R.N. (retired), was purchased for the National Collection in 1930.

INDEX

PAGE

Allen, R. 28
Anderson, Nils H. 46
Armstrong No. 8 Typewriter 15, 45

Bain, A., and Wright, T. . . 23
Bar-Lock No. 7 Typewriter . 16, 36
— — No. 15 Typewriter . 18, 47
— — No. 18 Typewriter . 20, 50
— — Portable Typewriter . 20, 50
Beach, Alfred Ely . . 25, 31
Benedict, H. H. 30
Bennett Typewriter . . . 9, 46
Bidet 22
Blickensderfer Typewriter . . 9, 39
Brooks, B. A. 30
Brown, A. T. 41
Burt " Typographer " . . 8, 22

" Caligraph " Typewriter . 15, 34
Circular Index Typewriter (maker unknown) . . . 14, 27
Clough, J. M. 30
Codville-Le Basée . . . 27
Colby, Hon. C. C. . . 41, 46
" Columbia " Typewriter . 8, 9, 35
Conti, Pietro 21
Controversial Points in Design . 7
Cooper, J. 25, 31
" Corona Four " Typewriter 18, 50
" Correspondent " Typewriter 16, 47
Cox Typewriter 9, 28
Crandall Typewriter . . 8, 9, 33
— New Model No. 3 Typewriter 11, 38

Daw and Tait Typewriter . 7, 16, 34
De May, F. A. 27
Densmore, James . . 29, 30
— Typewriter . . . 15, 38
Differential Spacing . . . 7
Down-Strike Designs . . . 15
Down-Strike-from-Front Designs . 15
Down-Strike-from-Rear, or -Side Designs 16
Drais, Baron Von . . . 23
Dujardin 23

Eddy, Oliver T. 24
Edelmann Typewriter . . 9, 43
Edison, T. A. 30
" Empire " Typewriter . 13, 49
" English " Typewriter . 16, 37

Fairbanks, J. B. 24
Fitch Typewriter . . . 16, 35
Flamm 27
Fontaine 28
Ford Typewriter . . . 13, 41
Foucault, Pierre 23

PAGE

Francis, Dr. S. W. . . 26, 31
Froment, Gustave . . . 24
Front-Strike Designs . . . 19

Gardner Typewriter . . 11, 39
Glidden, Carlos 29
" Globe " Typewriter . . . 8, 42
Gorin Decimal Tabulator . . 42
Grandjean " Stenowriter " 20, 27, 47
Granville " Automatic " Typewriter 13, 42
Grasshopper Movement Designs . 17
Grouping of Exhibits . . . 8
Grundy, A. (Patent) . . 19, 35
Guillemont 27

Hall Typewriter . . . 14, 28, 33
Hammond Folding Portable Typewriter 8, 49
— " Ideal " Typewriter . 8, 9, 33
" Hammonia " Typewriter . 14, 34
Hansen " Writing Ball " Typewriter 13, 29

Hardy " Stenotyper " . . 20, 27, 41
Historical Notes and Descriptions of the Exhibits . . . 21
Hood, Peter, Typewriter . . 9, 26
Horton Typewriter . . 18, 34, 44
House, G., Typewriter . 28, 31
Hughes' Typewriter for the Blind 14, 24

" Ideal " Typewriter . . 18, 44
" Imperial " Models B and D Typewriters . . . 16, 48
— Portable Typewriter, " Good Companion " . . 19, 51
— Standard Typewriter . 20, 51
Index System Designs . . 13
Influence of Designs for the Blind . 5
" International " Electric Typewriter 19, 53

Jacquet, Louis 21
Jenne, W. J. 30
Jones, J. M. . . . 25, 31
" Junior " Typewriter . . 9, 45

" Keystone " Typewriter . . 8, 44
Kidder, W. P. . . . 41, 46
Knaus, Von 21

Lambert Typewriter . . 13, 42
L'Hermina 21
Littledale 24
Livermore, B. 27
Lyman C. Smith & Co. . 41, 46

PAGE
Maskelyne " Differential " Typewriter 8, 17, 37
— " Victoria " Typewriter . 8, 17, 43
" Mignon " Typewriter . 14, 45
Mill, Henry 21
Mitterhofer, P. . . . 27, 31
Moya Visible Typewriter . 11, 45
Munson Typewriter . . 11, 36

" National " Portable Typewriter, No. 5 . . . . . 20, 48
Neipperg, Graf von . . . 21
Nerval, L. de 24
" New Century Caligraph " Typewriter 15, 44
" Noiseless " Original Typewriter 13, 46
— Portable Typewriter . 20, 48
North Typewriter . . 16, 40

Oliver No. 1 Typewriter . 16, 40
" Orga " Typewriter . 20, 49

Pape 24
Peeler, A. 28
Period up to 1830 . . . 21
— 1831–1840 22
— 1841–1850 23
— 1851–1860 25
— 1861–1870 27
— 1871–1880 29
— 1881–1890 33
— 1891–1900 38
— 1901–1910 45
— 1911–1920 47
— 1921–1930 48
— 1931 onwards . . . 50
Perrot, L. J. 23
Pingeron 21
Pitman, Isaac 5, 6
" Pittsburg " Typewriter . 20, 44
Pratt Original Typewriter . 13, 27
— " Pterotype " Typewriter . 9, 28
Prentice 24
Progin, Xavier . . . 22, 31
Prouty & Hynes (Patent) . 19, 35

Radial-Strike Designs . . . 11
Ravizza, Guiseppe . . 22, 31
Remington & Sons, E. . 6, 7, 30
— " Noiseless " Portable Typewriter 18, 50
— " Noiseless " Standard Typewriter 13, 52
— No. 1 Typewriter . . 15, 30, 32
— No. 2 Typewriter . . 15, 30, 32
— No. 5 Typewriter . . 15, 36
— No. 7 Typewriter . . 15, 42
— No. 10 Typewriter . . 20, 45
— Philo 30
— Portable Typewriter . . 48
— Rand Portable Typewriter, Model 1 . . . . 19, 51

PAGE
Rohlfs & Schmidt . . . 24
" Royal " Standard Typewriter 20, 51

Saintard, Dr. 24
Salter Visible Standard Typewriter 18, 47
Semi-Front-Strike Designs . . 18
Sholes, Christopher Latham 5, 29, 31
Sholes and Glidden . . 6, 29, 30
— — —, first model, 1868 . . 29
— — —, final model, 1873 . 29, 30
— — — Typewriter, as made by Remington . . . 6, 15, 30
Shorthand Systems . . . 5, 6
Sign and Symbol Writing Machines 20, 27
Smith Premier No. 4 Typewriter 15, 41
— — No. 10 Typewriter . 20–46
Sondalo, Baillet, and Coré . . 23
Soulé, Samuel 29
Spiro, Charles . . . 35, 36
Swinging-Sector Designs . . 8

Thomas, R. S. 25
Thurber, Charles . . 23, 24, 31
Touch System of Typing . . 7, 33
Turri, Pelegrino . . . 21
Type-Bar Using Designs . . 14
Type-Sleeve Designs . . . 11
Type-Wheel Designs . . . 9

Underwood No. 1 Typewriter 20, 43
— " Noiseless " Portable Typewriter 18, 50
— " Noiseless " Standard Typewriter 13, 52
— Standard Typewriter . 20, 52
Universal Keyboard, origin of 31, 32
Up-Strike Designs . . . 14

" Varityper " *See* Hammond . 33
" Velograph " Typewriter . 14, 36
" Victor " Typewriter . . 9, 39
" Virotyp " Typewriter . 14, 48

Wagner, F. X. 34, 43
" Waverley " Typewriter . 8, 16, 40
Webb, G. B. 42
Wheatstone Telegram Printers . 8, 25, 26, 31
Williams Typewriter . . 17, 38
Woodward, O. (Patent) . . 45
Wyckoff, Seamans, & Benedict . 7

Yöst " Caligraph " Typewriter 15, 34
— No. 1 Typewriter . . 15, 37
— No. 10 Typewriter . . 15, 45
— No. 20 Typewriter . . 20, 49

SCIENCE MUSEUM PUBLICATIONS

I. **Handbooks.**—These books are illustrated and include an historical account of the subject as well as a descriptive Catalogue of the Collection.

Aeronautics—I Heavier-than-air Aircraft *M. J. B. Davy, F.R.Ae.S.* (1935) 2*s.* 6*d.* (2*s.* 9*d.*)
Aeronautics—II Lighter-than-air Aircraft *M. J. B. Davy, F.R.Ae.S.* (1934) 2*s.* 6*d.* (2*s.* 9*d.*)
Aeronautics—III Propulsion of Aircraft *M. J. B. Davy, F.R.Ae.S.*, assisted by *G. Tilghman Richards, F.R.Ae.S., M.I.Mech.E., M.I.Ae.E.* (1936) 2*s.* *od.* (2*s.* 3*d.*)
Agricultural Implements and Machinery *A. J. Spencer, M.I.Mech.E.*, and *J. B. Passmore, M.Sc.* (1930) 2*s.* *od.* (2*s.* 3*d.*)
Applied Geophysics *H. Shaw, D.Sc., A.R.C.S., F.Inst.P.* (1936) 2*s.* *od.* (2*s.* 2*d.*)
British Fishing and Coastal Craft *G. S. Laird Clowes, M.A., A.I.N.A.* (1937) 2*s.* *od.* (2*s.* 2*d.*)
Chemistry *A. Barclay, A.R.C.S., A.I.C.*
Part I Historical Review (1937) 1*s.* 6*d.* (1*s.* 8*d.*)
Part II Descriptive Catalogue (1937) 2*s.* *od.* (2*s.* 3*d.*)
Electric Power *W. T. O'Dea, B.Sc., A.M.I.E.E.*
Part I History and Development (1933) 2*s.* *od.* (2*s.* 2*d.*)
Part II Descriptive Catalogue (1933) 2*s.* *od.* (2*s.* 2*d.*)
Marine Engines Part I History and Development *G. L. Overton, A.R.C.S.* (1935) 2*s.* *od.* (2*s.* 2*d.*)
Marine Engines Part II Descriptive Catalogue *H. P. Spratt, B.Sc., A.I.Mech.E.* In the press
Pumping Machinery *G. F. Westcott, B.A., A.M.I.Mech.E.*
Part I Historical Notes (1932) 2*s.* 6*d.* (2*s.* 9*d.*)
Part II Descriptive Catalogue (1933) 3*s.* 6*d.* (3*s.* 10*d.*)
Radio Communication *W. T. O'Dea, B.Sc., A.M.I.E.E.*
Part I History and Development (1934) 2*s.* 6*d.* (2*s.* 9*d.*)
Railway Locomotives and Rolling Stock *E. A. Forward, A.R.C.S., M.I.Mech.E.*
Part I Historical Review (1931) 2*s.* 6*d.* (2*s.* 9*d.*)
Part II Descriptive Catalogue (1931) 2*s.* *od.* (2*s.* 3*d.*)
Sailing Ships *G. S. Laird Clowes, M.A., A.I.N.A.*
Part I Historical Notes (1932) 3*s.* *od.* (3*s.* 3*d.*)
Part II Descriptive Catalogue (1936) 2*s.* 6*d.* (2*s.* 9*d.*)
Time Measurement *F. A. B. Ward, M.A., Ph.D.*
Part I Historical Review (1937) 1*s.* 6*d.* (1*s.* 8*d.*)
Part II Descriptive Catalogue (1937) 2*s.* *od.* (2*s.* 3*d.*)
Typewriters *G. Tilghman Richards, M.I.Mech.E., F.R.Ae.S., M.I.Ae.E.* (1938) 1*s.* 3*d.* (1*s.* 5*d.*)

II. **Descriptive Catalogues (Illustrated).**

Calculating Machines and Instruments *D. Baxandall, A.R.C.S.* (1926) 1*s.* *od.* (1*s.* 2*d.*)
Geodesy and Surveying *E. Lancaster-Jones, B.A.* (1925) 1*s.* 3*d.* (1*s.* 5*d.*)
Line Telegraphy and Telephony *R. P. G. Denman, B.A., A.M.I.E.E.* (1926) 9*d.* (10*d.*)
Machine Tools *E. A. Forward, A.R.C.S., M.I.Mech.E.* (1920) 1*s.* *od.* (1*s.* 2*d.*)
Marine Engines and Boilers *G. L. Overton, A.R.C.S.* (1926) 1*s.* *od.* (1*s.* 2*d.*)
Mechanical Road Vehicles *E. A. Forward, A.R.C.S., M.I.Mech.E.*
Part II Descriptive Catalogue (1936) 4*s.* *od.* (4*s.* 4*d.*)
Merchant Steamers *G. S. Laird Clowes, M.A., A.I.N.A.* (1927). 1*s.* 3*d.* (1*s.* 5*d.*)
Metallurgy *A. J. Spencer, M.I.Mech.E.* (1925) 1*s.* *od.* (1*s.* 2*d.*)
Meteorology *H. Shaw, D.Sc., A.R.C.S., F.Inst.P.* (1922) 1*s.* *od.* (1*s.* 2*d.*)
Miners' Lighting Appliances *A. J. Spencer, M.I.Mech.E.* (1926) 9*d.* (10*d.*)
Mining and Ore-Dressing *H. W. Dickinson, M.I.Mech.E.* (1920) 1*s.* *od.* (1*s.* 2*d.*)
Railway Construction and Working *E. A. Forward, A.R.C.S., M.I.Mech.E.* (1927) 1*s.* 3*d.* (1*s.* 5*d.*)
Road Transport *E. A. Forward, A.R.C.S., M.I.Mech.E.* (1926) 9*d.* (10*d.*)
Stationary Engines *H. W. Dickinson, M.I.Mech.E.* (1925) 2*s.* *od.* (2*s.* 3*d.*)
Steam Ships of War *G. L. Overton, A.R.C.S.* (1925) 1*s.* *od.* (1*s.* 2*d.*)
Textile Machinery *T. F. Parkinson, A.R.C.S.* (1921) 1*s.* *od.* (1*s.* 2*d.*)

III. Special Publications.

Aeronautics—Interpretive History of Flight *M. J. B. Davy, F.R.Ae.S.* (1937) 5*s*. 0*d*. (5*s*. 6*d*.)

Aeronautics—The work of Henson and Stringfellow in *M. J. B. Davy, F.R.Ae.S.* (1931) 5*s*. 0*d*. (5*s*. 6*d*.)

Atom Tracks *F. A. B. Ward, M.A., Ph.D.* (1937) 6*d*. (7*d*.)

Automatic Telephone, The—A brief description of the processes involved in making a call on the automatic systems of the British Post Office (with explanatory diagrams) *W. T. O'Dea, B.Sc., A.M.I.E.E.* (1934) 6*d*. (7*d*.)

Classification for Works on Pure and Applied Science (1936) 5*s*. 0*d*. (5*s*. 3*d*.)

Electric Illumination *W. T. O'Dea, B.Sc., A.M.I.E.E.* (1936) 6*d*. (7*d*.)

Guide (Outline) to the Exhibits in the Science Museum (1937) 3*d*. (4*d*.)

Guide to the Exhibits in the Introductory Collections (Children's Gallery) (1937) 3*d*. (4*d*.)

Hand List of Short Titles of Current Periodicals in the Science Library (1926) 1*s*. 0*d*. (1*s*. 3*d*.) Supplement (1929) 1*s*. 2*d*. (1*s*. 5*d*.)

Metallurgy—Collection of Specimens formed by late John Percy, M.D., F.R.S., catalogued by *Prof. J. E. Blake, M.A.*, with introduction by *Sir W. Chandler Roberts-Austen, K.C.B., F.R.S.* (1892) 4*s*. 6*d*. (5*s*. 0*d*.)

Rubber—Handbook of the Special Exhibition held in 1934 and a brief account of the history of Rubber from its source to the finished product. Compiled by the Rubber Growers' Association (1934) 6*d*. (7*d*.)

Television Edited by *G. R. M. Garratt, M.A.* (1937) 6*d*. (7*d*.)

Transatlantic Steam Navigation, One Hundred Years of *H. P. Spratt, B.Sc., A.I.Mech.E.* (1938) 6*d*. (7*d*.)

Very Low Temperatures *T. C. Crawhall, M.Sc., A.M.I.Mech.E.*

- Book One—Survey of physical principles and various applications (1936) 6*d*. (7*d*.)
- Book Two—Illustrated description of experiments and apparatus (1937) 2*s*. 0*d*. (2*s*. 2*d*.)
- Book Three—Symposium of seven lectures (1937) 1*s*. 3*d*. (1*s*. 4*d*.)

Watt Bicentenary Exhibition, Catalogue Compiled by *A. Stowers, B.Sc., A.M.Inst.C.E.* (1936) 9*d*. (10*d*.)

Watt, James, the Garret Workshop of *H. W. Dickinson, M.I.Mech.E.* (1937) 6*d*. (7*d*.)

IV. Annual Reports of the Advisory Council.

1931 9*d*. (10*d*.)
1932 9*d*. (10*d*.)
1933 9*d*. (10*d*.)
1934 1*s*. 0*d*. (1*s*. 1*d*.)
1935 1*s*. 0*d*. (1*s*. 1*d*.)
1936 1*s*. 3*d*. (1*s*. 4*d*.)

These publications are obtainable at :—

The SCIENCE MUSEUM, SOUTH KENSINGTON, LONDON, S.W.7
or H.M. STATIONERY OFFICE at the following addresses
Adastral House, Kingsway, London, W.C.2,
120 George Street, Edinburgh 2 ; 26 York Street, Manchester 1 ;
1 St. Andrew's Crescent, Cardiff ; 80 Chichester Street, Belfast ;
or through any bookseller.

TRADE ORDERS should be addressed to
H.M. STATIONERY OFFICE, Wholesale Department,
either at Cornwall House, Stamford Street, London, S.E.1 ;
or 120 George Street, Edinburgh 2.

Printed under the Authority of HIS MAJESTY'S STATIONERY OFFICE
by William Clowes & Sons, Ltd., London and Beccles.
(365) Wt. 2180—4189. 1,750. 4/38. W. C. & S., Ltd. Gp. 389.
S.O. Code No. 29-1055